PET-80

personal microcomputer training kit

user's manual

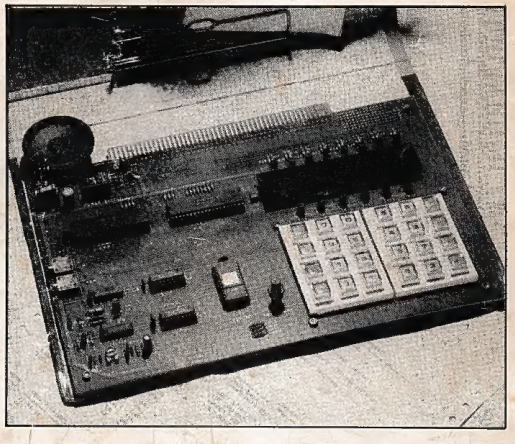

MINTRON

Preface

The Micro-computer has been widely applied to industrial control. It owns alert program control, can operate precisely; and processes data quickly. It also possesses the merits such as small volumn, program formulation is easy. From these, its range for application is enhanced, but, for the high price of the training equipments, it is still constrained to learning.

MINTRON——In order to enhance the technical level of microcomputer among the country, to educate expert for microcomputer, introduces especially its low price, function complete, whole-heartedly desigend PET-80, so as to achieve the expectation that the microcomputer will be applied to industrial control.

11
40
70
7E
23
96
23
79
03
C2
00
10
76

80 sec to record
1024 bytes on tape.

MINTRON

CONTENTS

CHAPTER 1 OPERATION OF PET-80 2
1-1 Power Supply 2
1-2 Keyboard and Symbol Declaration of PET-80 2
1-3 Number System 3
1-4 Display Configuration 3
1-5 Keyboard Configuration 4
1-6 Input Configuration 4
1-7 Display of Operating Error 4
1-8 Function of Keyboard Operation 5

CHAPTER 2 HARDWARE 14
2-1 Specification of PET-80 14
2-2 Introduction of PET-80 14

CHAPTER 3 EXAMPLE 20
3-1 Program Example 20
3-2 How to Detect the Error? 24

CHAPTER 4 MONITOR 25

CHAPTER 5 MONITOR UTILITY AND THEIR APPLICATION 40
5-1 Monitor Utility 40
5-2 Examples of the monitor utility 44

APPENDIX 59

CHAPTER 1 OPERATION OF PET-80

PET-80 is a very simple learning kit. It has been simplified strenuously on operation and been hoped that one can familiar with this kit step by step following the direction of this operating handbook.

1-1 Power Supply:

The power supply can use the AC ADAPTER of the normal mini-recorder with specifications 110VAC-9VDC, 700mA. When power is well connected, the PET-80 will play the music of the pecker immediately, after the music is over, the screen will display a section of game that the pecker chases monster finally, it displays "PET-80". After the screen displays [PET-80], you can start to operate. If you can not finish the procedures described previously, press the [RST] button, if the screen still can not display "PET-80", check the power supply to see that is it well connected.

1-2 Keyboard and Symbol Declaration of PET-80:

Please, be familiar with the function of the keyboard below first.

[RST]	(RESET):	System Reset, when pressed, the screen will be [P][E][T]-[8][0]
[TO TAPE]	(TO TAPE):	Store the data in system memory to cassette of recorder.
[FROM TAPE]	(FROM TAPE):	Read the data in cassette to system memory.
[EXEC]	(EXECUTE):	Start to execute the program of user or to execute the function after definition.
[ADRS]	(ADDRESS):	Set memory address.
[DATA]	(DATA):	Write data to memory.
[−]	(LAST):	Back to the last operation (on decrease the address field in the screen by one and display the data in the memory with the new address).
[+]	(NEXT):	Continue to next operation (on increase the address field in the screen by one and display the data in the memory with the new address).

[0] [1] [2] [3] [4] [5] [6] [7]
[8] [9] [A] [B] [C] [D] [E] [F]
} (HEX) Keyboard of Hexadecimal Number

1-3 Number System

PET-80 uses hexadecimal operation. The figure below is the cross reference between hexadecimal, decimal, and binary operation. Also listed is the LED display of the character.

HEXADECIMAL	DECIMAL	BINARY	LED DISPLAY
0	0	0000	0
1	1	0001	1
2	2	0010	2
3	3	0011	3
4	4	0100	4
5	5	0101	5
6	6	0110	6
7	7	0111	7
8	8	1000	8
9	9	1001	9
A	10	1010	A
B	11	1011	b
C	12	1100	C
D	13	1101	d
E	14	1110	E
F	15	1111	F

1-4 Display Configuration

Throughtout this handbook, we use the rectangular frame to indicate the data displayed on the screen which can display six different character or symbol. The display can be defined as different field, the four on the left indicates address, and the two on the right indicates the data stored in that address. We name this the "Basic Type" of the display, during this, the left four is named "address field", and the right two the "data field".

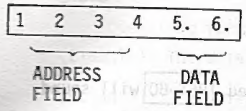

Left four is the address of the memory. Right two is the data of the memory pointed to by the address field.

Throughout this handbook, when the contents of the display be ignored or unknown, we indicate it by □.

1-5 Keyboard Configuration

Throughout this handbook, we use the square frame to indicate keyboard, the interier character or symbol name the function of that button.

[ADRS] [A] [+]

1-6 Input Configuration

(ADDRESS) indicates that user can input address through keyboard. The address has four digits, so it need to press four alphanumerical buttons. If the input exceeds four digits. PET-80 takes the last four digits, i.e., use the display on the screen as address. (When first input a digit, PET-80 will clear the previous data to 0, then shifts the input datas from right to left sequentially).

(DATA) indicates that user input a byte of data through keyboard, the rule of input is the same as (ADDRESS) except that (DATA) presses two alphanumerical buttons only.

1-7 Display of Operating Error

PET-80 will signal a warning on the screen during occurrence of unsuitable button pressing or error-detected on executing sequence. The first case will be rejected by PET-80 immediately after the button is pressed, and the screen will display -EEEEEE until the unsuitable button is released, and the display will recover right away. The second one occurs when an error is detected by PET-80 after the execution of user's program, this will display on the screen -EEEEEE to signal the user that error is detected.

1-8 Function of Keyboard Operation

1-8.1 [RST] ——— System Reset Button

RST is the short for RESET. After be pressed, PET-80 will sound as RESET. normally, the system will auto-reset after power is connected. RESET will get PET-80 enter into initial state and prepare anything needed for the system to start. It also assigns parameters needed for the system, finally, the screen will display PET-80 and the system is ready for receiving command from keyboard. PET-80 has two kinds of reset the difference of these two kinds involves the design of system software, please reference to the monitor. At the start of the power, the auto-reset of PET-80 will play the music of the pecker, then a section of chasing between the pec and monsters, finally display the PET-80 . If the [RST] button is depres the RESET display PET-80 only.

1-8.2 [ADRS] ——— Address Set Button

Operating format: [ADRS] (ADDRESS)

(Example) The address to be assigned is 1100H

Button	Display	Description
[ADRS]	□□□□□□	After [ADRS] is depressed, there will display four points on the address field to indicate that PET-80 is ready for address input.
[1]	0001□□	Pressing the first alphanumerical button [1]
[1]	0011□□	Pressing the second alphanumerical button [1]
[0]	0110□□	Pressing the third alphanumerical button [0]
[0]	1100□□	Pressing the last alphanumerical button and [0] finishing the address input.

*If input exceeds four characters only the last four is taken as address.

1-8.3 [DATA] ——— Data Set Button

Operating format: [DATA] (DATA)

(Example): The data in address 1100H is CDH.

Button	Display	Description:
	1100	Onginal display.
[DATA]	1100	After [DATA] is depressed, the points shift to data field to indicate that PET-80 is ready for data input.
[C]	1100C	Pressing the first alphanumerical button [C]
[D]	1100Cd	Pressing the last alphanumerical button [D]

The data CDH does not input to memory address 1100H until [+] or [−] is depressed.

1-8.4 [+] Forward to Next Operation

[−] Back to Last Operation

When the display is in "Basic type" (left four is address field and right two is data field), the depression of these two button will cause the content of address field to increment or decrement by one, at the same time, the data before depression of the button will be stored to the memory location which is assigned by the address field.

(Example): Write CDH to 1100H, and 69H to 1101H.

Button	Display	Description
	1100Cd	Original display
[+]	1101	When [+] is depressed, CDH is written to 1100H, at the same time, PET-80 increment the address field by one to 1101H. The □□ on the display represents the content of 1101H, if □□ is not the data "69" we wanted, we can change it by pressing the alphanumerical button.
[6]	1101.6	Pressing the first alphanumerical button [6]
[9]	1101.69	Pressing the last alphanumerical button [9]

[+]	1102	Pressing [+] write the data to 1101H and increment 1101H to 1102H.

(Example): The address field of display is 1102H. We want to change the data in 1101H to 63H, the procedure is as following.

Button	Display	Description
	1102	Original display
[−]	1101.69	Pressing [−] the content of address field will decrement by one and the data at that location will display too. We can back to the location need to be modified as described and press the alphanumerical button to change it.
[6]	1101.96	Pressing the first alphanumerical button [6]
[3]	1101.63	Pressing the last alphanumerical button [3]
[+]	1102	Write 63H to 1101H.

1-8.5 [EXEC] ——— Execution Button

When display is in "Basic type" (left four is address field and right two is data field), the depression of this button will start the execution of the program being input right before. The PET-80 will start to execute from the address given after [EXEC] is depressed.

Button	Display	Description
	PET-80	Left four positions are not address field (Non-basic type).
[EXEC]	-Error	Display -Error to indicale error detected.
	PET-80	The display will recover after the button is released.
[ADRS]		Pressing [ADRS] to assign ADDRESS. The address is assigned as 1100H.
[1]		
[1]		
[0]		
[0]		PET-80 will start to execute from 1100H.
[EXEC]		

1-8.6 Use Recorder Interface

One will use a long program some time or other. It is long and bored to key in a long program. Because of this, we can record the program in cassette to avoid data missing of some valuable program which will be used frequently.

PET-80 possesses "Recorder Interface" circuit which allow you to read from or write to high quality casette. A pretty long program may need only one and half a minute to read from or write to recorder in PET-80 (the time needed for 1K memory to be read or write). Most program will not be so long, so the time needed will be even shorter.

Recorder Connection:

1. Add power to the cassette-recorder.
2. Connect one end of the connected wire to EAR position of the cassette-recorder, the other end to the EAR position of the PET-80.
3. Connect one end of the other connect wire to the MIC position of the cassette-recorder, the other end to the MIC position of the PET-80.

(1) [TO TAPE] ——— Store data to Cassette Button

Operating format: [TO TAPE] (FILE NAME) [+] (STARTING ADDRESS) [+] (ENDING ADDRESS)

(Example): Assign FILENAME as F001 and store the data between 1100H and 1103H to cassette.

*First, one must well connects the wires

Button	Display	Description
[TO TAPE]	....-F	F represents the FILENAME of the output file.
[F][0][0][1]	F001-F	FILENAME is F001.
[+]	....-S	S represents the starting address of the file.
[1][1][0][0]	1100-S	Starting address is 1100H.
[+]	....-E	E represents the ending address.
[1][1][0][3]	1103-E	Ending address is 1103H.
[EXEC]	......	Start to output the data.
	1103..	During the transition time, the displays are all null, and the TONE LED light at the same time. After the tansition, the screen displays the ending address as "Basic type".

After [TO TAPE] is depressed, the screen displays ....-E , where F is the short for FILENAME. The cassette can store several section of programs just like it can store several section of musics. For recognition, we assign a FILENAME to each program, so when we want to read the data back to PET-80, we can find it according to the FILENAME After [+] is depressed, the screen displays ....-S where S is the short for START which represents the starting address of the RAM to be stored. Pressing [+] again will cause the display change to ....-E,

where E is the short for END which represents the ending address of the RAM to be stored. Before [EXEC] is depressed, one must be sure that recorder and PET-80 are well connected, then wind the cassette to a suitable place and press the PLAY and REC button of the recorder to make it begin to record, finally, press the [EXEC] button of PET-80. (If the recorder is not ready and PET-80 send out program at that time, the recorder will get an useless program which is not complete).

(2) [FROM TAPE] ——— Read data from Cassette

Operating format: [FROM TAPE] (FILE NAME) [EXEC]

(Example): Read a program with FILENAME F001 from recorder. (The cassette must be recorded by [TO TAPE]).

First, one must well connect the recorder and PET-80 and rewind the cassette to the position in front of FILE F001.

Button	Display	Description
[FROM TAPE]	_ _ _ _ - F	F indicates the user to input the FILENAME.
F 0 0 1	F 0 0 1 - F	FILENAME = F001
[EXEC]		After starting to execute, the display are all null, at this time, PET-80 is searching for the FILENAME to be read.
		Display the FILENAME be read in for 1.5 seconds. and continue to search until FILENAME is found.
	F 0 0 1 - F	Display the FILENAME be found.
	- - - - - -	When the correct FILENAME is found, display "-".
	1 1 0 3 _ _	After the data is read up, display the ending address.

Because the cassette is recorded by [TO TAPE], it gets some information such as FILENAME, STARTING ADDRESS, ENDING ADDRESS on it, the user needs just input FILENAME from keyboard, the PET-80 will search for the same FILENAME, and after the FILENAME is found, PET-80 will write the data according to the recorded starting and ending address to the RAM. When [TO TAPE] stores data, it adds some check code to the file, as PET-80 wants to read the file back, it will check the code, if there exists some error, the screen will display - E r r o r if not, it will display the ending address as "Basic type".

*Precaution of using a recorder. (Please first pay attention to the demand of recorder and cassette)

1. When using the cassette-recorder, first, adjust the VOLUME CONTROL to the position between 7 and 8 (between seventy and eighty percent of the loudest volumn), next, if recorder equipped with TONE CONTROL, adjust it to the highest position.
2. It is best to use the cassette especially made for computer using. One can use the normal cassette too, but high quality cassette will be expected. Remember that there is LEAD IN which is normally made by non-magnetic material in both ends of the cassette, one can not record program in LEAD IN part, so first wind through this part when you use this kind of cassette. Please use the newer cassette as possible as you can, because the old and over used cassette will get some demerit on. Although, PET-80 gets tolerance of the demerit to some extent, but too heavily a demerit still can not be accepted.
3. If one want to store program in cassette forever, he can break the tab of the cassette by screw driver to prevent the content of cassette be erased.
4. Do not expose the cassette in strong magnetic field. Also avoid to put it in high temperature, unclean and directly sun shine environment.

1-8.7 INTERRUPT Button

The INTERRUPT button controls the $\overline{INT}$ pin of CPU. When CPU IFF (INTERRUPT ENABLE FILP FLOPS) is "1", pressing of the INTERRUPT button will cause the command be read in through DATA BUS by CPU and be executed. If there exists no interface on DATA BUS, because of the pull up resistors on DATA BUS, the CPU will read in OFF H, i.e. CPU continues to execute RST 7.

(Example): The Music of the pecker

Please operate the keyboard as following, then the music of the pecker will be played once.

Button	Display
RST	PEE-80
ADRS	
1	
1	
0	
0	
DATA	
C	
D	
+	
2	
8	
+	
0	
4	
+	
7	
6	
+	
ADRS	
1	
1	
0	
0	
EXEC	

Pressing RST ADRS 1 1 0 0 EXEC again, the music will be played once more.

1-8.7 INTERRUPT Button

The INTERRUPT button controls the $\overline{INT}$ pin of CPU. When CPU IFF (INTERRUPT ENABLE FILP FLOPS) is "1", pressing of the INTERRUPT button will cause the command be read in through DATA BUS by CPU and be executed. If there exists no interface on DATA BUS, because of the pull up resistors on DATA BUS, the CPU will read in OFF H, i.e. CPU continues to execute RST 7.

(Example): The Music of the pecker

Please operate the keyboard as following, then the music of the pecker will be played once.

Button	Display
RST	PET-80
ADRS	
1	1
1	11
0	110
0	1100
DATA	1100
C	1100C
D	1100Cd
+	1101
2	1101.2
8	1101.28
+	1102
0	1102.0
4	1102.04
+	1103
7	1103.7
6	1103.76
+	1104
ADRS	1104
1	1
1	11
0	110
0	1100
EXEC	

Pressing RST ADRS 1 1 0 0 EXEC again, the music will be played once more.

CHAPTER 2 HARDWARE

2-1 Specifications of PET-80

NAME	Microcomputer learning kit.
TYPE NO.	PET-80
CPU	Z-80
CLOCK	1.79 MHZ
EPROM	2K BYTE (can be expanded to 4K BYTE) 2716 x 1
RAM	1K BYTE (can be expanded to 4K BYTE) 2114 x 2
PARALLEL INTERFACE	8 BIT x 3 PORT, PIO 8255-A
SERIAL INTERFACE	110 BAUD FSK
KEYPAD	25 buttons, 8 function buttons, 16 alphanumerical buttons and 1 interrupt button.
DISPLAY CIRCUIT	6 digits, 7-SEGMENT LED DISPLAY
POWER SUPPLY	9V DC, 700 mA.
OPERATING TEMPERATURE	0°C - 50°C
SIZE	280mm x 190mm
ALSO PRESENCE	Operating manual x 1

2-2 Introduction to system PET-80

2-2.1 Generation of system clock

The PET-80 uses one of 74LS14 schmitt trigger circuit to constitute a multivibrational oscillator,the other to constitute a buffer. The system clock of PET-80 is 1.79 MHZ, the oscillator is consititute by RC, so it can change its frequency (by adjusting R or C).

In the example "CLOCK", one can adjust the oscillatory frequency to make the clock more precise. But after the frequency is adjusted, the read and write of the cassette will be influenced, so when the frequency is adjusted and you want to operate the read and write of the cassette,please first adjust the frequency to 1.79 MHZ (The clock of PET-80 is always been adjusted after PET-80 is assembled.

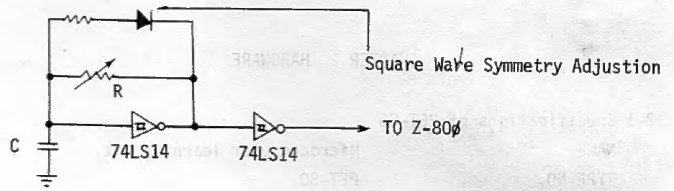

Schmitt Trigger Multivibrational Oscillator

2-2.2 Generation of RESET signal

The RESET signal is generated by 74LS14. When [RST] is depressed, the first schmitt trigger circuit output a high level voltage to 8255 to make 8255 generate a RESET signal, at the same time, the second schmitt trigger circuit output a low level voltage to reset Z-80 CPU. At the starting of the power, because of the capacitor cross the two ends of the [RST] button, the RESET signal will be generated.

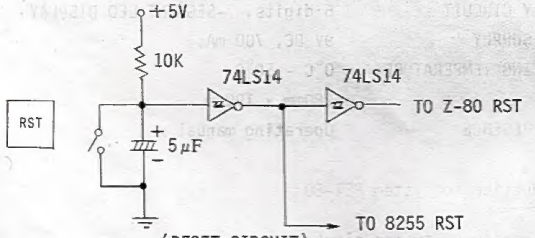

(RESET CIRCUIT)

2-2.3 Address assignment of memory space

The PET-80 does not use the full decoded address mode (although full decoding is not difficult) because we want to make the circuit more bright and clear. In practice, PET-80 sends MRQ and A_{11}, A_{13} of CPU to 74LS193 to decode for Q_0, Q_1, Q_2, Q_3 four memory spaces, they each are 0000H-0FFFFH, 1000H- 1FFFH, 2000H- 2FFFH, 3000H- 3FFFH. There is 4K BYTE for each memory space, and we give the first space to 2716 EPROM for monitor utility, the fourth space to 2114 RAM which contains 4K BYTE. The PET-80 contains 1K BYTE RAM (address from 1000H to 13FFH), the spare region should be expanded by user for usage.

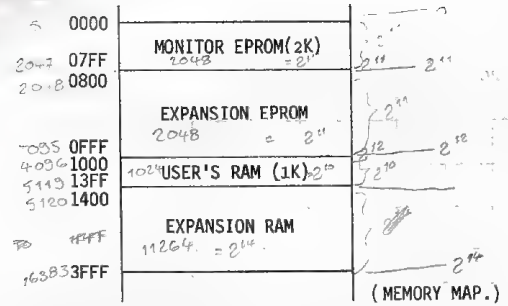

(MEMORY MAP.)

2-2.4 I/O port address

PET-80 uses 8255 as I/O port which has 3 sets of 8 BIT port chosen by A_0 and A_1 to do the job of a I/O port. When using more than one 8255, the $\overline{CS}$ pin can be used as chip selection. $\overline{CS}$ is chosen by $\overline{IORQ}$, A_7, A_6 decoded by 74LS139.

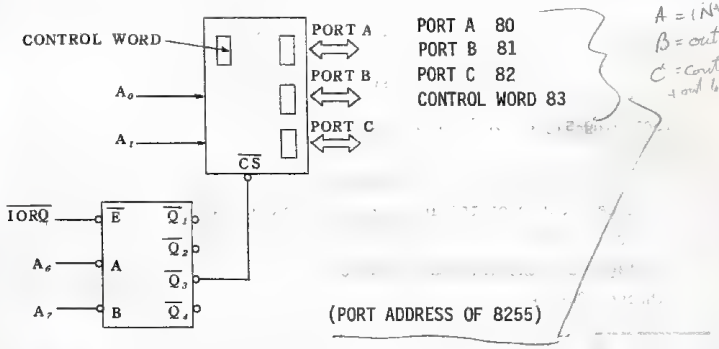

PORT A 80
PORT B 81
PORT C 82
CONTROL WORD 83

(PORT ADDRESS OF 8255)

2-2.5 Keypad and Display

The input from keypad and the display are all controlled by 8255. From port A of 8255 the data of keypad is read in, from port B of 8255 the data to display is sent out, from port C of 8255 the signal of scanning is sent out which scan keypad and display at the same time.

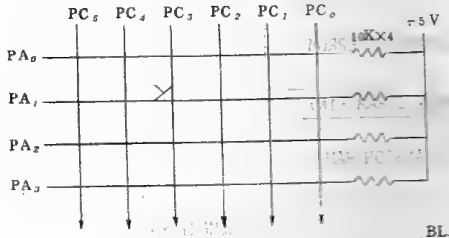

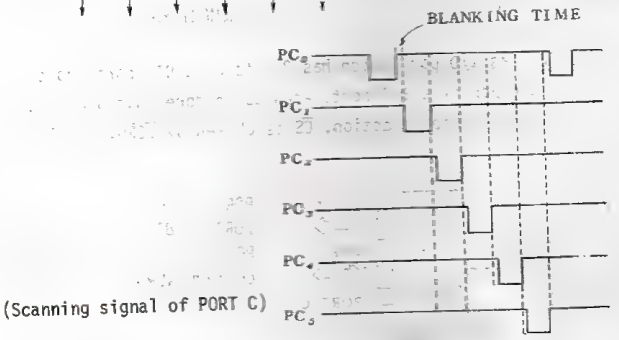

(Scanning signal of PORT C)

Before the keyboard has been depressed, PA_0 - PA_3 always keeps +5V voltage because of the 10K pull up resistor. After pressing of the keyboard, PA drops to low level voltage because that PC sent out a low level voltage, and the information which will be altered to data is sent to CPU through PORT A.

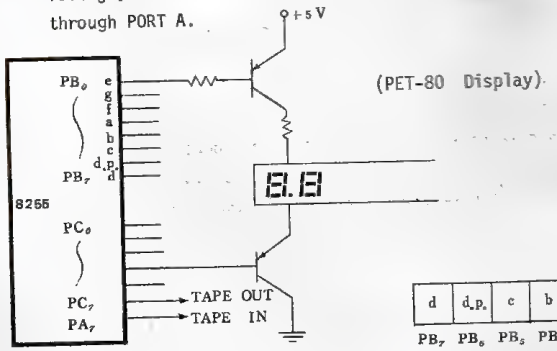

(PET-80 Display)

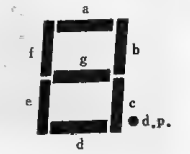

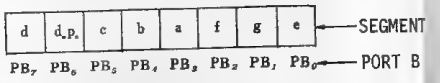

The seven segments and the floating point of the display are controlled by PORT B, every bit for a segment or floating point. When BIT = 0, the segment of floating point light up, if BIT = 1, it's not. The data from monitor will be inverted before sent to PORT B, please reference to D & K1' of monitor.

2-2.6 Cassette interface

On recording, data is sent out from PORT C through RC wave shaping and decaying circuit to MIC position of recorder. When data is read back from recorder, the data is sent out from the EAR position through RC filter circuit to CPU for management from PA_7 and finally is stored to RAM.

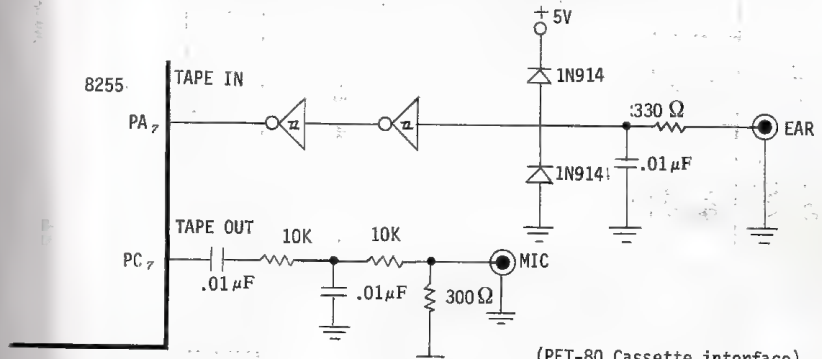

(PET-80 Cassette interface)

Data format of cassette

(1) In Bit format, represents "0" by twelf 2KHZ and three 1KHZ, "1" by six 2KHZ and six 1KHZ.

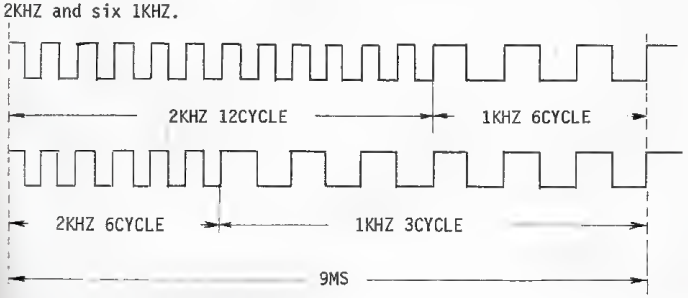

(2) BYTE Format

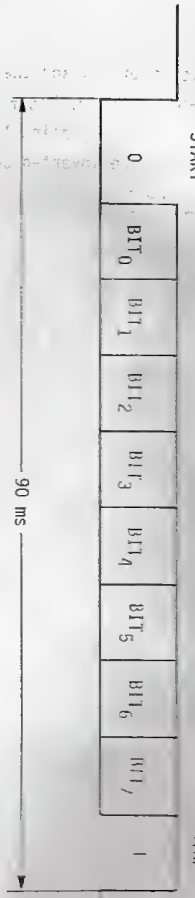

(3) FILE Format

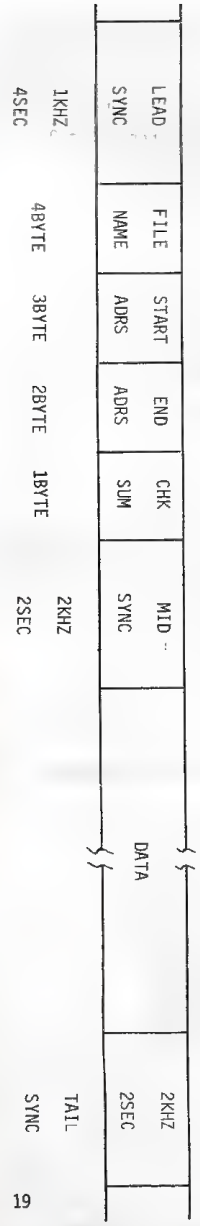

CHAPTER 3 EXAMPLE

3-1 Program Example

(Example 1) 1's complement

Purpose: Changing the content of 1040H to its 1's complement and store the result to 1041H.

```
ADDR  OBJECT   LABEL   MNEMONI          COMMENT
====  =======  =====   ==============   ==============================
1000  3A 40 10         LD   A,(1040H)   ;GET DATA
1003  2F               CPL              ;COMPLEMENT DATA
1004  32 41 10         LD   (1041H),A   ;STORE DATA
1007  76               HALT             ;STOP CPU
1040  6A               DB   6AH
```

Program execution result 1041H = 95H

(Example 2) 8-BIT ADDITION

Purpose: Adding the contents of 1040H and 1041H and store the result to 1042H.

```
ADDR  OBJECT   LABEL   MNEMONI          COMMENT
====  =======  =====   ==============   ==============================
1000  21 40 10         LD   HL,1040H    ;GET FIRST OPERAND
1003  7E               LD   A,(HL)
1004  23               INC  HL
1005  86               ADD  A,(HL)      ;ADD SECOND OPERAND
1006  23               INC  HL
1007  77               LD   (HL),A      ;STORE DATA
1008  76               HALT
1040  38               DB   38H
1041  2B               DB   2BH
```

Program execution result 1042H = 63H

(Example 3) SHIFT LEFT ONE BIT

Purpose: Shifting the content of 1040H left one bit and store the result to 1041H, the rightmost bit is set to 0.


```
ADDR  OBJECT   LABEL   MNEMONI          COMMENT
====  =======  =====   ==============   ==============================
1000  3A 40 10         LD   A,(1040H)   ;GET DATA
1003  87               ADD  A,A         ;SHIFT DATA LEFT LOGICALLY
1004  32 41 10         LD   (1041H),A   ;STORE RESULT
1007  76               HALT
1040  6F               DB   6FH
```

Program execution result 1041H= DEH = 11011110B

(Example 4) Mask off most significant four bits

Purpose: Storing the least significant four bits of 1004H to 1041H and clear the most significant four bits to 0.

```
ADDR  OBJECT   LABEL   MNEMONI          COMMENT
====  =======  =====   ==============   ==============================
1000  3A 40 10         LD   A,(1040H)   ;GET DATA
1003  E6 0F            AND  A,0FH       ;MASK OFF MOST SIGNIFICANT BITS
1005  32 41 10         LD   (1041H),A
1008  76               HALT             ;STORE RESULE
1040  B8               DB   B8H
```

Program execution result 1041H= 08H

(Example 5) Find larger of two numbers

Purpose: Assuming that the contents of 1040H and 1041H are two unsigned number, put the larger one to 1042H.

```
ADDR  OBJECT   LABEL   MNEMONI          COMMENT
====  =======  =====   ==============   ==============================
1000  21 40 10         LD   HL,1040H    ;GET FIRST OPERAND
1003  7E               LD   A,(HL)
1004  23               INC  HL
1005  BE               CP   (HL)        ;IS SECONT OPERAND LARGER?
1006  D2 0A 10         JP   NC,DONE
1009  7E               LD   A,(HL)      ;YES,GET SECOND OPERAND INSTEAD
100A  23         DONE  INC  HL
100B  77               LD   (HL),A      ;STORE LARGER OPERAND
100C  76               HALT
1040  79               DB   79H
1041  5A               DB   5AH
```

Program execution result 1042H= 79H

The CP instruction can alter the flag status, so that we can define the following situation by this characteristics. In the following, A represents the content of accumulator, X represents the operand to be compared.

If A = X	then Z = 1	Z is the zero flag
If A ≠ X	then Z = 0	C is the carry flag
If A < X	then C = 1	
If A ≥ X	then C = 0	

(Example 6) Table of squares

Purpose: To get the square value of the content of 1040H by looking up table and store the result to 1041H. Assuming that the content of 1040H is larger than 0 and smaller than 7.

```
ADDR  OBJECT   LABEL   MNEMONI          COMMENT
====  =======  =====  ==========  ================================
1000  3A 40 10        LD   A,(1040H)  ;GET DATA
1003  6F              LD   L,A        ;MAKE DATA INTO 16-BIT INDEX
1004  26 00           LD   H,00H
1006  11 60 10        LD   DE,1060H   ;GET STARTING ADDRESS OF TABLE
                                      ;OF SQUARES
1009  19              ADD  HL,DE      ;INDEX TABLE WITH DATA
100A  7E              LD   A,(HL)     ;GET SQUARE OF DATA
100B  32 41 10        LD   (1041H),A
100E  76              HALT
1040  03              DB   03H
```

Program execution result 1041H = 09H

ADDRESS	HEXADECIMAL	DECIMAL
1060H	00H	0 (0^2)
1061H	01H	1 (1^2)
1062H	04H	4 (2^2)
1063H	09H	9 (3^2)
1064H	10H	16 (4^2)
1065H	19H	25 (5^2)
1066H	24H	36 (6^2)
1067H	31H	49 (7^2)

(The memory space occupied by square value)

(Example 7) Sum of data

Purpose: To sum a series of data with the length of series stored in 1041H and the series begins at 1042H, finally store the result in 1040H.

```
ADDR  OBJECT   LABEL   MNEMONI          COMMENT
====  =======  =====  ==========  ================================
1000  21 41 10        LD   HL,1041H
1003  46              LD   B,(HL)     ;COUNT=LENGTH OF SERIES OF NUMBER
1004  97              SUB  A,A        ;SUM=0
1005  23        SUMD  INC  HL
1006  86              ADD  A,(HL)     ;SUM=SUM+DATA
1007  05              DEC  B
1008  C2 05 10        JP   NZ,SUMD
100B  32 40 10        LD   (1040H),A  ;STORE SUM
100E  76              HALT
1041  03              DB   03H
1042  28              DB   28H
1043  55              DB   55H
1044  26              DB   26H
```

Program execution result = 28H+55H+26H = A3H

(Example 8) Find maximum

Purpose: To find the maximum value of a series of data with the length of series stored in 1041H and the data begins at 1042H, finally store the result in 1040H.

```
ADDR  OBJECT   LABEL   MNEMONI          COMMENT
====  =======  =====  ==========  ================================
1000  21 40 10        LD   HL,1041H
1003  46              LD   B,(HL)     ;COUNT=NUMBER OF ELEMENTS
1004  97              SUB  A,A        ;CLEAR A
1005  23        NEXTE INC  HL
1006  BE              CP   A,(HL)     ;IS NEXT ELEMENY > MAXIMUM
1007  D2 0B 10        JP   NC,DECNT
100A  7E              LD   A,(HL)     ;YES,REPLACE MAXIMUM
100B  05        DECNT DEC  B
100C  C2 05 10        JP   NZ,NEXTE
100F  32 40 10        LD   (1040H),A  ;SAVE MAXIMUM
1012  76              HALT
1041  05              DB   05H
1042  67              DB   67H
1043  79              DB   79H
1044  15              DB   15H
1045  E3              DB   E3H
1046  72              DB   72H
```

Program execution result 1040H = E3H

3-2 How to detect error (Using HALT LED)

On executing a program, if the program exists error, the result won't come out as expected and we need to detect the error right now. The simplest method to detect error is to use to "HALT" instruction. Inside PET-80, there is a "HALT LED" which will light up upon execution of the HALT instruction until the "RESET" button is depressed.

We can use this method to insert "HALT" instruction to any place of the porgram, if there exists no error, the LED will light up, then try it in another position, if the light will not light up, then the program must exists error there.


```
**************************************
*  PET-80 MONITOR LIST VERSION 1.0   *
*    COPYRIGHT (C) 1981,05,01        *
*    MINTRON ENTERPRISE CO.,LTD.     *
**************************************
```

ADDR	OBJ	LABEL	MNEMONIC		COMMAND
0000	06 00	START	LD	B,00H	;POWER ON.
0002	10 FE		DJNZ	$	
0004	C3 3B 00		JP	BEGIN	
0008	C3 10 12	RST1	JP	1210H	;RST1 SUBROUTINES ADDRESS: 1210.
0010	C3 20 12	RST2	JP	1220H	;RST2 SUBROUTINES ADDRESS: 1220.
0018	C3 30 12	RST3	JP	1230H	;RST3 SUBROUTINES ADDRESS: 1230.
0020	C3 40 12	RST4	JP	1240H	;RST4 SUBROUTINES ADDRESS: 1240.
0028	C3 50 12	RST5	JP	1250H	;RST5 SUBROUTINES ADDRESS: 1250.
0030	C3 60 12	RST6	JP	1260H	;RST6 SUBROUTINES ADDRESS: 1260.
0038	C3 70 12	RST7	JP	1270H	;RST7 SUBROUTINES ADDRESS: 1270.
003B	3E 90	BEGIN	LD	A,90H	;SETTING THE OPEREATIONOF 8255.
003D	D3 83		OUT	(83H),A	
003F	3E FF		LD	A,0FFH	
0041	D3 82		OUT	(82H),A	
0043	31 BF 13		LD	SP,13BFH	
0046	3A F5 13		LD	A,(13F5H)	
0049	FE 80		CP	80H	
004B	C4 E8 01		CALL	NZ,INI	
004E	21 00 10		LD	HL,1000H	— Set start address of RAM in HL.
0051	22 EE 13		LD	(13EEH),HL	
0054	AF		XOR	A	
0055	32 F6 13		LD	(13F6H),A	
005B	DD 21 C0 04		LD	IX,DISP1	
005C	AF	SETST0	XOR	A	
005D	32 F4 13		LD	(13F4H),A	
0060	DC 15 02		CALL	C,NEWDP2	;SETTING THE FORM OF LED DISPLAY.
0063	C3 69 00		JP	MAIN	
0066	C3 80 12	NMI	JP	1280H	
0069	31 BF 13	MAIN	LD	SP,13BFH	;SETTING INITIAL VALUE AND STORED.
006C	CD 9D 03		CALL	D&K	
006F	CD 74 00		CALL	KEYEXC	;KEY-IN EXECUTING.
0072	18 F5		JR	MAIN	
0074	FE 10	KEYEXC	CP	10H	;CHECKING THE KEY-IN AS NUMERIC KEY.
0076	38 24		JR	C,KHEX	
0078	21 F6 13		LD	HL,13F6H	
007B	CB C6		SET	0,(HL)	
007D	D6 10		SUB	10H	
007F	FE 08		CP	08H	;CHECKING THE KEY-IN AS FUNCTION KEY.
0081	21 23 05		LD	HL,KSUFUN	
0084	DA D7 01		JP	C,BRANCH	
0087	DD 21 C6 13		LD	IX,13C6H	
008B	D6 08		SUB	08H	
008D	21 F4 13		LD	HL,13F4H	

```
ADDR    OBJ          LABEL    MNEMONIC          COMMAND
====    ===========  ======   ==============    ========================================

0090  77                     LD    (HL),A
0091  21 F3 13               LD    HL,13F3H
0094  36 00                  LD    (HL),00H
0096  21 2D 05               LD    HL,KFUN
0099  C3 D7 01               JP    BRANCH
009C  4F               KHEX  LD    C,A         ;NUMERIC KEY (HEX.).
009D  21 37 05               LD    HL,HTAB
00A0  3A F4 13         BR1   LD    A,(13F4H)
00A3  C3 D7 01               JP    BRANCH
00A6  21 43 05         KINC  LD    HL,ITAB     ;INC KEY (+).
00A9  18 F5                  JR    BR1
00AB  21 4F 05         KDEC  LD    HL,DTAB     ;DEC KEY (-).
00AE  18 F0                  JR    BR1
00B0  21 5B 05         KEXEC LD    HL,ETAB     ;EXEC KEY.
00B3  18 EB                  JR    BR1
00B5  CD 67 04         KDATA CALL  TESTM       ;DATA KEY.
00B8  CD 15 02               CALL  MEMDP2
00BB  C9                     RET
00BC  00                     NOP
00BD  00                     NOP
00BE  CD 0C 02         KADRS CALL  MEMDP1      ;ADRS KEY.
00C1  C9                     RET
00C2  CD 32 02         KTAPWR CALL STEPDP      ;TO TAPE AND FROM TAPE KEY.
00C5  C9                     RET
00C6  C3 E2 01         HFIX  JP    ERRDIS      ;OPEREATING ERRORS.
00C9  2A EE 13         HDA   LD    HL,(13EEH);PRESSED ADRS KEY, WILL APPEAR THE NUME-
                                               ;RIC OF ADSAVE.
00CC  CD 95 03               CALL  RAMCHK
00CF  C2 E2 01               JP    NZ,ERRDIS
00D2  CD F8 01               CALL  PRECL1
00D5  79                     LD    A,C
00D6  ED 6F                  RLD
00D8  CD 15 02               CALL  MEMDP2
00DB  C9                     RET
00DC  21 EE 13         HAD   LD    HL,13EEH  ;SHIFT KEY-IN NUMERIC VALUE INTO ADDRE-
                                               ;SS AREA.
00DF  CD 04 02               CALL  PRECL2
00E2  79                     LD    A,C
00E3  ED 6F                  RLD
00E5  23                     INC   HL
00E6  ED 6F                  RLD
00E8  CD 0C 02               CALL  MEMDP1
00EB  C9                     RET
00EC  CD 4D 02         HTAPWR CALL  LDCTBF     ;WHEN PRESSED 'TO TAPE' KEY, INPUT THE
                                               ;DATA OF FILENAME AND ADDRESS.
00EF  CD 04 02               CALL  PRECL2
00F2  79                     LD    A,C
00F3  ED 6F                  RLD
00F5  23                     INC   HL
00F6  ED 6F                  RLD
00F8  CD 32 02               CALL  STEPDP
00FB  C9                     RET
```



```
ADDR    OBJ          LABEL    MNEMONIC          COMMAND
====    ===========  ======   ==============    ========================================

00FC  C3 E2 01         IFIX  JP    ERRDIS
00FF  2A EE 13         ADRADD LD   HL,(13EEH);THE ADSAVE ADDED 1, ENABLE THE ADDRESS
                                               ;DATA ADDED 1.
0102  23                     INC   HL
0103  22 EE 13               LD    (13EEH),HL
0106  CD 15 02               CALL  MEMDP2
0109  C9                     RET
010A  21 F3 13         TPFUN1 LD   HL,13F3H  ;USING 'TO TAPE',PRESS '+' KEY, TO BE
                                               ;CONVERTED TO ANOTHER PARAMETER.
010D  34                     INC   (HL)
010E  CD 57 02               CALL  LOCTNA    ;THE PARAMETERS AS 'F','S' AND 'E'.
0111  20 04                  JR    NZ,ISTEP
0113  35                     DEC   (HL)
0114  C3 E2 01               JP    ERRDIS
0117  CD 32 02         ISTEP CALL  STEPDP
011A  C9                     RET
011B  C3 E2 01               JP    ERRDIS
011E  2A EE 13         ADRDEC LD   HL,(13EEH);LET ADSAVE DATA MINUS  1 , ENABLE
                                               ;THE ADDRESS DATA MINUS  1 .
0121  2B                     DEC   HL
0122  22 EE 13               LD    (13EEH),HL
0125  CD 15 02               CALL  MEMDP2
0128  C9                     RET
0129  21 F3 13         TPTUN2 LD   HL,13F3H  ;USING 'TO TAPE', PRESS'-' KEY TO BE
                                               ;CONVERTED TO ANOTHER PARAMETER.
012C  35                     DEC   (HL)
012D  CD 57 02               CALL  LOCTNA
0130  20 04                  JR    NZ,DSTEP
0132  34                     INC   (HL)
0133  C3 E2 01               JP    ERRDIS
0136  CD 32 02         DSTEP CALL  STEPDP
0139  C9                     RET
013A  C3 E2 01         EFIX  JP    ERRDIS    ;OPERATING ERRORS.
013D  E5               ADREXC PUSH HL        ;EXECUTING THE ADDRESS OF ADSAVE.
013E  2A EE 13               LD    HL,(13EEH)
0141  E3                     EX    (SP),HL
0142  C9                     RET
0143  ED 53 EE 13       ENDFUN LD   (13EEH),DE;EXECUTED THE PROGRAM, THE END ADDRESS
                                               ;IS APPEARED ON LED DISPLAY.
0147  CD 15 02               CALL  MEMDP2
014A  C9                     RET
014B  CD E4 02         EWT   CALL  SUM       ; STORE  DATA TO TAPE.
014E  38 2A                  JR    C,ERROR
0150  32 C5 13               LD    (13C5H),A
0153  21 A0 0F               LD    HL,0FA0H  ;OUTPUT 4K CYCLE 1KHZ SQUARE WAVE AS
                                               ;STARTING SYNC. SIGNAL.
0156  CD CC 02               CALL  SOUN1K
0159  21 BF 13               LD    HL,13BFH
015C  01 07 00               LD    BC,0007H
015F  CD 5E 03               CALL  TAPOUT
0162  21 A0 0F               LD    HL,0FA0H  ;OUTPUT 4K CYCLE 2KHZ SQUARE WAVE AS
                                               ;MIDDLE SYNC. SIGNAL.
```

```
ADDR     OBJ          LABEL     MNEMONIC              COMMAND
====     ===========  ======    ==============  ========================================

0165  CD D0 02             CALL  SOUN2K
0168  CD F1 02             CALL  GETPTR
016B  CD 5E 03             CALL  TAPOUT
016E  21 A0 0F             LD    HL,0FA0H  ;OUTPUT 4K CYCLE 2KHZ SQUARE WAVE AS
                                           ;END SYNC. SIGNAL.

0171  CD D0 02             CALL  SOUN2K
0174  ED 5B C3 13  ENDTAP  LD    DE,(13C3H)
0178  18 C9                JR    ENDFUN
017A  DD 21 92 05  ERROR   LD    IX,ERR    ;OPEREATING ERROR, IT WILL APPEARED 'E-
                                           ;RROR'.
017E  C3 5C 00             JP    SETSTO
0181  2A BF 13             LD    HL,(13BFH);READ DATA FROM TAPE
0184  22 FA 13             LD    (13FAH),HL
0187  3E BF        LEAD    LD    A,0BFH    ;APPERED '......'.
0189  D3 81                OUT   (81H),A
018B  21 E8 03             LD    HL,03E8H
018E  CD 43 03     LEAD1   CALL  PERIOD    ;CHECK THE START SYNC. SIGNAL.
0191  38 F4                JR    C,LEAD
0193  2B                   DEC   HL
0194  7C                   LD    A,H
0195  B5                   OR    L
0196  20 F6                JR    NZ,LEAD1
0198  CD 43 03     LEAD2   CALL  PERIOD
019B  30 FB                JR    NC,LEAD2
019D  21 BF 13             LD    HL,13BFH  ;READ FILENAME DATA.
01A0  01 07 00             LD    BC,0007H
01A3  CD 04 03             CALL  TAPEIN
01A6  38 DF                JR    C,LEAD
01A8  ED 5B BF 13          LD    DE,(13BFH)
01AC  CD F9 03             CALL  ADRSDP
01AF  06 96                LD    B,96H
01B1  CD C3 03     FILEDP  CALL  D&K1'     ;APPEARED DATA AND CHECKING FILENAME.
01B4  10 FB                DJNZ  FILEDP
01B6  2A FA 13             LD    HL,13FAH
01B9  B7                   OR    A
01BA  ED 52                SBC   HL,DE
01BC  20 C9                JR    NZ,LEAD
01BE  3E FD                LD    A,0FDH
01C0  D3 81                OUT   (81H),A
01C2  CD F1 02             CALL  GETPTR
01C5  38 B3                JR    C,ERROR
01C7  CD 04 03             CALLL TAPEIN    ;READ DATA FROM TAPE.
01CA  38 AE                JR    C,ERROR
01CC  CD E4 02             CALL  SUM
01CF  21 C5 13             LD    HL,13C5H
01D2  BE                   CP    (HL)
01D3  20 A5                JR    NZ,ERROR
01D5  18 9D                JR    ENDTAP
01D7  5E          BRANCH   LD    E,(HL)    ;DISTRIBUTE TO THE FUNCTION KEY OF
                                           ;MONITOR PROGRAM.

01D8  23                   INC   HL
01D9  56                   LD    D,(HL)
```



```
ADDR     OBJ          LABEL     MNEMONIC              COMMAND
====     ===========  ======    ==============  ========================================

01DA  23                   INC   HL
01DB  85                   ADD   A,L
01DC  6F                   LD    L,A
01DD  6E                   LD    L,(HL)
01DE  26 00                LD    H,00H
01E0  19                   ADD   HL,DE
01E1  E9                   JP    (HL)
01E2  21 F6 13     ERRDIS  LD    HL,13F6H  ;PROGRAM TEST & DEBUGGING.
01E5  CB FE                SET   7,(HL)
01E7  C9                   RET
01E8  CD 28 04     INI     CALL  MONMUS    ;THE INITIAL VALUE WHEN POWER-ON.
01EB  CD 6B 02             CALL  INIDIP
01EE  3E 80                LD    A,80H
01F0  32 F5 13             LD    (13F5H),A
01F3  C9                   RET
01F4  00                   NOP
01F5  00                   NOP
01F6  00                   NOP
01F7  00                   NOP
01F8  3A F6 13     PRECL1  LD    A,(13F6H) ;DELETED MEMORY 1 BYTE.
01FB  B7                   OR    A
01FC  C8                   RET   Z
01FD  3E 00                LD    A,00H
01FF  77                   LD    (HL),A
0200  32 F6 13             LD    (13F6H),A
0203  C9                   RET
0204  CD F8 01     PRECL2  CALL  PRECL1    ;DELETED MEMORY 2 BYTE.
0207  C8                   RET   Z
0208  23                   INC   HL
0209  77                   LD    (HL),A
020A  2B                   DEC   HL
020B  C9                   RET
020C  3E 01        MEMDP1  LD    A,01H     ;THE ADDRESS DATA ENTRY TO ADDRESS AREA
                                           ;,THE CODE ENTRY TO DATA AREA.
020E  06 04                LD    B,04H
0210  21 C8 13             LD    HL,13C8H
0213  18 07                JR    SAV12
0215  3E 02        MEMDP2  LD    A,02H
0217  06 02                LD    B,02H
0219  21 C6 13             LD    HL,13C6H
021C  32 F4 13             LD    (13F4H),A
021F  D9                   EXX
0220  ED 5B EE 13          LD    DE,(13EEH)
0224  CD F9 03             CALL  ADRSDP
0227  1A                   LD    A,(DE)
0228  CD 05 04             CALL  DADP
022B  D9                   EXX
022C  CB F6        SETPT   SET   6,(HL)    ;SETTING DOT ON LED DISPLAY.
022E  23                   INC   HL
022F  10 FB                DJNZ  SETPT
0231  C9                   RET
0232  CD 4D 02     STEPTP  CALL  LOCTBF    ;IT WILL APPEARE THE FUNCTIONS OF ALL
                                           ;KINDS OF PARAMETER WHEN PRESS 'TO T-
                                           ;APE' AND 'FROM TAPE'.
```

```
ADDR    OBJ        LABEL   MNEMONIC                COMMAND
==== ===========  ======  ============  ==========================================

0235  5E                   LD    E,(HL)
0236  23                   INC   HL
0237  56                   LD    D,(HL)
0238  CD F9 03             CALL  ADRSDP
023B  21 C8 13             LD    HL,13C8H
023E  06 04                LD    B,04H
0240  CD 2C 02             CALL  SETPT
0243  CD 57 02             CALL  LOCTNA
0246  6F                   LD    L,A
0247  26 02                LD    H,02H
0249  22 C6 13             LD    (13C6H),HL
024C  C9                   RET
024D  3A F3 13     LOCTBF  LD    A,(13F3H) ;SETTING THE ADDRESS OF ALL KINDS OF PA-
                                           ;RAMETERS.
0250  87                   ADD   A,A
0251  21 BF 13             LD    HL,13BFH
0254  85                   ADD   A,L
0255  6F                   LD    L,A
0256  C9                   RET
0257  3A F4 13     LOCTNA  LD    A,(13F4H) ;SETTING ALL KINDS OF PARAMETERS.
025A  D6 04                SUB   A,04H
025C  87                   ADD   A,A
025D  87                   ADD   A,A
025E  11 B0 05             LD    DE,BLANK
0261  83                   ADD   A,E
0262  5F                   LD    E,A
0263  3A F3 13             LD    A,(13F3H)
0266  83                   ADD   A,E
0267  5F                   LD    E,A
0268  1A                   LD    A,(DE)
0269  B7                   OR    A
026A  C9                   RET
026B  0E 08        INIDIP  LD    C,08H     ;DISPLAYING GRAPH AND'PET-80'WHEN PO-
                                           ;WER-ON.
026D  21 D8 04             LD    HL,DISP4
0270  E5                   PUSH  HL
0271  DD 21 C9 04          LD    IX,DISP2
0275  CD BA 02     A1      CALL  SOU1K
0278  DD E3                EX    (SP),IX
027A  06 0E                LD    B,0EH
027C  CD C3 03     A2      CALL  D&K1'
027F  10 FB                DJNZ  A2
0281  CD C3 02             CALL  SOU2K
0284  06 0E                LD    B,0EH
0286  CD C3 03     A3      CALL  D&K1'
0289  10 FB                DJNZ  A3
028B  0D                   DEC   C
028C  20 E7                JR    NZ,A1
028E  0E 12                LD    C,12H
0290  DD 21 C9 04          LD    IX,DISP2
0294  21 D8 04     B1      LD    HL,DISP4
0297  E5                   PUSH  HL
```



```
ADDR    OBJ        LABEL   MNEMONIC                COMMAND
==== ===========  ======  ============  ==========================================

0298  06 0C        BLOOP   LD    B,0CH
029A  CD C3 03     B2      CALL  D&K1'
029D  10 FB                DJNZ  B2
029F  DD 2B                DEC   IX
02A1  0D                   DEC   C
02A2  28 10                JR    Z,C1
02A4  DD E3                EX    (SP),IX
02A6  06 0C                LD    B,0CH
02A8  CD C3 03     B3      CALL  D&K1'
02AB  10 FB                DJNZ  B3
02AD  CD BA 02             CALL  SOU1K
02B0  DD 2B                DEC   IX
02B2  DD E3                EX    (SP),IX
02B4  0D           C1      DEC   C
02B5  20 E1                JR    NZ,BLOOP
02B7  E1                   POP   HL
02B8  E1                   POP   HL
02B9  C9                   RET
02BA  D9           SOU1K   EXX             ;SETTING 'SOUND' AS 1KHZ.
02BB  21 50 00             LD    HL,0050H
02BE  CD CC 02             CALL  SOUN1K
02C1  D9                   EXX
02C2  C9                   RET
02C3  D9           SOU2K   EXX             ;SETTING 'SOUND' AS 2KHZ.
02C4  21 A0 00             LD    HL,00A0H
02C7  CD D0 02             CALL  SOUN2K
02CA  D9                   EXX
02CB  C9                   RET
02CC  0E 41        SOUN1K  LD    C,41H     ;OUTPUT SOUND SIGNAL.
02CE  18 02                JR    SOUND
02D0  0E 1F        SOUN2K  LD    C,1FH
02D2  29           SOUND   ADD   HL,HL
02D3  11 01 00             LD    DE,0001H
02D6  3E FF                LD    A,FFH
02D8  D3 82        SQWAVE  OUT   (82H),A
02DA  41                   LD    B,C
02DB  10 FE                DJNZ  $
02DD  EE 80                XOR   80H
02DF  ED 52                SBC   HL,DE
02E1  20 F5                JR    NZ,SQWAVE
02E3  C9                   RET
02E4  CD F1 02     SUM     CALL  GETPTR    ;CHECKING THE LENGTH OF START AND END
                                           ;MEMORY.
02E7  D8                   RET   C
02E8  AF                   XOR   A
02E9  86           SUMCAL  ADD   A,(HL)
02EA  ED A1                CPI
02EC  EA E9 02             JP    PE,SUMCAL
02EF  B7                   OR    A
02F0  C9                   RET
02F1  21 C1 13     GETPTR  LD    HL,13C1H  ;CALCULATING THE LENGTH OF MEMORY.
02F4  5E           GETP    LD    E,(HL)
```

```
ADDR     OBJ      LABEL     MNEMONIC                COMMAND
==== ========== ====== ============== ========================================

02F5  23                  INC   HL
02F6  56                  LD    D,(HL)
02F7  23                  INC   HL
02F8  4E                  LD    C,(HL)
02F9  23                  INC   HL
02FA  66                  LD    H,(HL)
02FB  69                  LD    L,C
02FC  B7                  OR    A
02FD  ED 52               SBC   HL,DE
02FF  4D                  LD    C,L
0300  44                  LD    B,H
0301  03                  INC   BC
0302  EB                  EX    DE,HL
0303  C9                  RET
0304  AF          TAPEIN  XOR   A          ;READ TAPE DATA AND STORED INTO MEMO-
                                           ;RY.
0305  08                  EX    AF,AF'
0306  CD 11 03    TLOOP   CALL  GTBYTE
0309  73                  LD    (HL),E
030A  ED A1               CPI
030C  EA 06 03            JP    PE,TLOOP
030F  08                  EX    AF,AF'
0310  C9                  RET
0311  CD 22 03    GTBYTE  CALL  GETBIT     ;READ 1 BYTE DATA FROM TAPE.
0314  16 08               LD    D,08H
0316  CD 22 03    GLOOP   CALL  GETBIT
0319  CB 1B               RR    E
031B  15                  DEC   D
031C  20 F8               JR    NZ,GLOOP
031E  CD 22 03            CALL  GETBIT
0321  C9                  RET
0322  D9          GETBIT  EXX              ;READ 1 BIT DATA FROM TAPE.
0323  21 00 00            LD    HL,0000H
0326  CD 43 03    COUNT   CALL  PERIOD
0329  14                  INC   D
032A  15                  DEC   D
032B  20 11               JR    NZ,TERR
032D  38 06               JR    C,SHORTP
032F  2D                  DEC   L
0330  2D                  DEC   L
0331  CB C4               SET   0,H
0333  18 F1               JR    COUNT
0335  2C          SHORTP  INC   L
0336  CB 44               BIT   0,H
0338  28 EC               JR    Z,COUNT
033A  CB 15               RL    L
033C  D9                  EXX
033D  C9                  RET
033E  08          TERR    EX    AF,AF'
033F  37                  SCF
0340  08                  EX    AF,AF'
0341  D9                  EXX
0342  C9                  RET
```



```
ADDR     OBJ      LABEL     MNEMONIC                COMMAND
==== ========== ====== ============== ========================================

0343  11 00 00    PERIOD  LD    DE,0000H   ;CHECKING THE CYCLE LENGTH OF TAPE SIG-
                                           ;NAL.
0346  DB 80       CHK 0   IN    A,(80H)
0348  13                  INC   DE
0349  17                  RLA
034A  38 FA               JR    C,CHK 0
034C  3E 40               LD    A,40H
034E  D3 82               OUT   (82H),A
0350  DB 80       CHK 1   IN    A,(80H)
0352  13                  INC   DE
0353  17                  RLA
0354  30 FA               JR    NC,CHK 1
0356  3E C0               LD    A,0C0H
0358  D3 82               OUT   (82H),A
035A  7B                  LD    A,E
035B  FE 2A               CP    2AHBIT
035D  C9                  RET
035E  5E          TAPOUT  LD    E,(HL)     ;LET THE MEMORY DATA  STORED
                                           ;INTO TAPE.
035F  CD 68 03            CALL  OTBYTE
0362  ED A1               CPI
0364  EA 5E 03            JP    PE,TAPOUT
0367  C9                  RET
0368  16 08       OTBYTE  LD    D,08H      ;OUTPUT 1 BYTE DATA.
036A  B7                  OR    A
036B  CD 7B 03            CALL  OUTBIT
036E  CB 1B       OLOOP   RR    E
0370  CD 7B 03            CALL  OUTBIT
0373  15                  DEC   D
0374  20 F8               JR    NZ,OLOOP
0376  37                  SCF
0377  CD 7B 03            CALL  OUTBIT
037A  C9                  RET
037B  D9          OUTBIT  EXX              ;OUTPUT 1 BIT DATA.
037C  26 00               LD    H,00H
037E  38 09               JR    C,OUT1
0380  2E 0C       OUT0    LD    L,0CH
0382  CD D0 02            CALL  SOUN2K
0385  2E 03               LD    L,03H
0387  18 07               JR    BITEND
0389  2E 06       OUT1    LD    L,06H
038B  CD D0 02            CALL  SOUN2K
038E  2E 06               LD    L,06H
0390  CD CC 02    BITEND  CALL  SOUN1K
0393  D9                  EXX
0394  C9                  RET
0395  7E          RAMCHK  LD    A,(HL)     ;CHECKING THE MEMORY DEFINITED AS RAM.
0396  2F                  CPL   compose.
0397  77                  LD    (HL),A
0398  7E                  LD    A,(HL)
0399  2F                  CPL
039A  77                  LD    (HL),A
```

Load A with contents of addr in HL.

```
ADDR     OBJ       LABEL    MNEMONIC                COMMAND
==== ===========  ======  ============  ========================================

039B  BE                   CP    (HL)
039C  C9                   RET
039D  DD E5         D&K    PUSH  IX        ;SCANNING KEYBOARD AND LED DISPLAY.
039F  21 F6 13             LD    HL,13F6H
03A2  CB 7E                BIT   7,(HL)
03A4  28 04                JR    Z,SCPRE
03A6  DD 21 92 05          LD    IX,ERR
03AA  06 04         SCPRE  LD    B,04H
03AC  CD C3 03      SCNX   CALL  D&K1'
03AF  30 F9                JR    NC,SCPRE
03B1  10 F9                DJNZ  SCNX
03B3  CB BE                RES   7,(HL)
03B5  DD E1                POP   IX
03B7  CD C3 03      SCLOOP CALL  D&K1'
03BA  38 FB                JR    C,SCLOOP
03BC  21 67 05      KEYMAP LD    HL,0567H
03BF  85                   ADD   A,L
03C0  6F                   LD    L,A
03C1  7E                   LD    A,(HL)
03C2  C9                   RET
03C3  37            D&K1'  SCF
03C4  08                   EX    AF,AF'
03C5  D9                   EXX
03C6  0E 00                LD    C,00H
03C8  1E FE                LD    E,0FEH
03CA  DD 7E 00      KCOL   LD    A,(IX)
03CD  2F                   CPL
03CE  D3 81                OUT   (81H),A
03D0  7B                   LD    A,E
03D1  D3 82                OUT   (82H),A
03D3  06 C9                LD    B,0C9H
03D5  10 FE                DJNZ  $
03D7  06 06                LD    B,06H
03D9  DB 80                IN    A,(80H)
03DB  57                   LD    D,A
03DC  CB 1A         KROW   RR    D
03DE  38 02                JR    C,NOKEY
03E0  79                   LD    A,C
03E1  08                   EX    AF,AF'
03E2  0C            NOKEY  INC   C
03E3  10 F7                DJNZ  KROW
03E5  DD 23                INC   IX
03E7  CB 03                RLC   E
03E9  3E FF                LD    A,0FFH
03EB  D3 82                OUT   (82H),A
03ED  CB 73                BIT   6,E
03EF  20 D9                JR    NZ,KCOL
03F1  11 FA FF             LD    DE,FFFAH
03F4  DD 19                ADD   IX,DE
03F6  D9                   EXX
03F7  08                   EX    AF,AF'
03F8  C9                   RET
```



```
ADDR     OBJ       LABEL    MNEMONIC                COMMAND
==== ===========  ======  ============  ========================================

03F9  21 C8 13      ADRSDP LD    HL,13C8H  ;LET DATA OF 'DE' REGISTOR CONVERTED TO
                                           ; 7-SEGEMENT LED DISPLAY CODE; AND
                                           ;STORED INTO DISPBF 13C8 - 13CB.
03FC  7B                   LD    A,E
03FD  CD 17 04             CALL  2-SEG
0400  7A                   LD    A,D
0401  CD 17 04             CALL  2-SEG
0404  C9                   RET
0405  21 C6 13      DADP   LD    HL,13C6H  ;LET DATA OF 'A' REGISTOR CONVERTED TO
                                           ; 7-SEGEMENT LED DISPLAY CODE; AND
                                           ;STORED INTO DISPBF 13C6,13C7.
0408  CD 17 04             CALL  2-SEG
040B  C9                   RET
040C  E5            1-SEG  PUSH  HL        ;LETTING DATA OF 'A' REGISTOR CONVERTED
                                           ; TO 7-SEGEMENT.
040D  21 A0 05             LD    HL,SEGTAB
0410  E6 0F                AND   0FH
0412  85                   ADD   A,L
0413  6F                   LD    L,A
0414  7E                   LD    A,(HL)
0415  E1                   POP   HL
0416  C9                   RET
0417  F5            2-SEG  PUSH  AF        ;LET DATA 'A' REGISTOR CONVERTED
0418  CD 0C 04             CALL  1-SEG
041B  77                   LD    (HL),A
041C  23                   INC   HL
041D  F1                   POP   AF
041E  0F                   RRCA
041F  0F                   RRCA
0420  0F                   RRCA
0421  0F                   RRCA
0422  CD 0C 04             CALL  1-SEG
0425  77                   LD    (HL),A
0426  23                   INC   HL
0427  C9                   RET
0428  FD 21 DE 04   MONMUS LD    IY,SONG   ;USING MUSIC PROGRAM OF MONITOR PROGRAM,
                                           ;OUTPUT MUSIC FORM FIXED 'IY'.
042C  FD E5         MUSIC  PUSH  IY
042E  DD E1                POP   IX
0430  DD 7E 00             LD    A,(IX)
0433  87                   ADD   A,A
0434  38 30                JR    C,STOP
0436  FA 2C 04             JP    M,MUSIC
0439  0E 00                LD    C,00H
043B  CB 77                BIT   6,A
043D  20 02                JR    NZ,PLAY
043F  CB F9                SET   7,C
0441  E6 3F         PLAY   AND   3FH
0443  21 80 04             LD    HL,FRQTAB
0446  85                   ADD   A,L
0447  6F                   LD    L,A
0448  5E                   LD    E,(HL)
```

```
ADDR    OBJ        LABEL    MNEMONIC                COMMAND
==== ========== ====== ============= ========================================

0449  23                  INC   HL
044A  56                  LD    D,(HL)
044B  DD 23               INC   IX
044D  DD 66 00            LD    H,(IX)
0450  3E FF               LD    A,0FFH
0452  6A          TONE    LD    L,D        ;EXECUTING STOP SCALE AND MUSICA SCALE.
0453  D3 82       TONOUT  OUT   (82H),A
0455  43                  LD    B,E
0456  00          DELAY   NOP
0457  00                  NOP
0458  00                  NOP
0459  10 FB               DJNZ  DELAY
045B  A9                  XOR   C
045C  2D                  DEC   L
045D  20 F4               JR    NZ,TONOUT
045F  25                  DEC   H
0460  20 F0               JR    NZ,TONE
0462  DD 23               INC   IX
0464  18 CA               JR    MUSIC+4
0466  C9          STOP    RET
0467  3A F4 13    TESTM   LD    A,(13F4H) ;CHECKING THE FORM OF LED DISPLAY.
046A  FE 01               CP    01H
046C  C8                  RET   Z
046D  FE 02               CP    02H
046F  C8                  RET   Z
0470  E1                  POP   HL
0471  C3 E2 01            JP    IGNORE

                          ORG   0480H
0480  E1 18       FRQTAB  DW
0482  D4 1A               DW
0484  C8 18               DW
0486  BD 1D               DW
0488  B2 1E               DW
048A  A8 20               DW
048C  9F 22               DW
048E  96 24               DW
0490  8D 26               DW
0492  85 29               DW
0494  7E 2B               DW
0496  77 2E               DW
0498  70 31               DW
049A  6A 33               DW
049C  64 37               DW
049E  5E 3A               DW
04A0  59 3D               DW
04A2  54 41               DW
04A4  4F 45               DW
04A6  4A 49               DW
04A8  46 4D               DW
04AA  42 52               DW
04AC  3E 57               DW
```



```
ADDR    OBJ        LABEL    MNEMONIC
==== ========== ====== =============

04AE  3B 5C               DW
04B0  37 62               DW
04B2  34 67               DW
04B4  31 6E               DW
04B6  2E 74               DW
04B8  2C 7B               DW
04BA  29 82               DW
04BC  27 8A               DW
04BE  25 92               DW
04C0  BD          DISP1   DB
04C1  BF                  DB
04C2  02                  DB
04C3  87                  DB
04C4  8F                  DB
04C5  1F                  DB
04C6  00                  DB
04C7  00                  DB
04C8  00                  DB
04C9  BD          DISP2   DB
04CA  00                  DB
04CB  3F                  DB
04CC  3F                  DB
04CD  3F                  DB
04CE  00                  DB
04CF  BD          DISP3   DB
04D0  BF                  DB
04D1  02                  DB
04D2  87                  DB
04D3  8F                  DB
04D4  1F                  DB
04D5  00                  DB
04D6  00                  DB
04D7  00                  DB
04D8  B8          DISP4   DB
04D9  00                  DB
04DA  1E                  DB
04DB  1E                  DB
04DC  1E                  DB
04DD  00                  DB
04DE  11 02       SONG    DW
04E0  11 02               DW
04E2  11 02               DW
04E4  0E 01               DW
04E6  0C 01               DW
04E8  11 02               DW
04EA  11 02               DW
04EC  15 04               DW
04EE  20 01               DW
04F0  11 02               DW
04F2  11 02               DW
04F4  11 02               DW
04F6  0E 01               DW
```

```
ADDR    OBJ        LABEL    MNEMONIC
==== ========== ====== =============

04F8  0C 01               DW
04FA  11 02               DW
04FC  11 02               DW
04FE  0E 04               DW
0500  20 01               DW
0502  11 02               DW
0504  11 02               DW
0506  11 02               DW
0508  0E 01               DW
050A  0C 01               DW
050C  11 02               DW
050E  11 02               DW
0510  15 02               DW
0512  16 02               DW
0514  18 02               DW
0516  16 02               DW
0518  15 02               DW
051A  11 01               DW
051C  15 01               DW
051E  11 04               DW
0520  20 01               DW
0522  80                  DB
0523  A6 00       KSUFUN  DW
0525  00                  DB
0526  05                  DB
0527  0A                  DB
0528  00                  DB
0529  0F                  DB
052A  00                  DB
052B  00                  DB
052C  00                  DB
052D  BE 00       KFUN    DW
052F  00                  DB
0530  00                  DB
0531  00                  DB
0532  00                  DB
0533  00                  DB
0534  00                  DB
0535  04                  DB
0536  04                  DB
0537  C6 00       HTAB    DW
0539  00                  DB
053A  16                  DB
053B  03                  DB
053C  00                  DB
053D  00                  DB
053E  00                  DB
053F  26                  DB
0540  26                  DB
0541  00                  DB
0542  00                  DB
0543  FC 00       ITAB    DW
```

```
ADDR     OBJ        LABEL     MNEMONIC
====  ==========  ======  ==============

0545  00                    DB
0546  03                    DB
0547  03                    DB
0548  00                    DB
0549  00                    DB
054A  00                    DB
054B  0E                    DB
054C  0E                    DB
054D  00                    DB
054E  00                    DB
054F  1B 01         DTAB    DW
0551  00                    DB
0552  03                    DB
0553  03                    DB
0554  00                    DB
0555  00                    DB
0556  00                    DB
0557  0E                    DB
0558  0E                    DB
0559  00                    DB
055A  00                    DB
055B  3A 01         ETAB    DW
055D  00                    DB
055E  03                    DB
055F  03                    DB
0560  00                    DB
0561  00                    DB
0562  00                    DB
0563  11                    DB
0564  47                    DB
0565  00                    DB
0566  00                    DB
0567  19          KEYTAB    DB
0568  14                    DB
0569  11                    DB
056A  10                    DB
056B  00                    DB
056C  00                    DB
056D  0F                    DB
056E  0B                    DB
056F  07                    DB
0570  03                    DB
0571  00                    DB
0572  00                    DB
0573  0E                    DB
0574  0A                    DB
0575  06                    DB
0576  02                    DB
0577  00                    DB
0578  00                    DB
0579  0D                    DB
057A  09                    DB

ADDR     OBJ        LABEL     MNEMONIC
====  ==========  ======  ==============

057B  05                    DB
057C  01                    DB
057D  00                    DB
057E  00                    DB
057F  0C                    DB
0580  08                    DB
0581  04                    DB
0582  00                    DB
0583  00                    DB
0584  00                    DB
0585  00                    DB
0586  1E                    DB
0587  1F                    DB
0588  12                    DB
0589  00                    DB
058A  00                    DB
058B  00                    DB
058C  00                    DB
058D  00                    DB
058E  00                    DB
058F  00                    DB
0590  00                    DB
0591  00                    DB
0592  03            ERR     DB
0593  A3                    DB
0594  03                    DB
0595  03                    DB
0596  8F                    DB
0597  02                    DB
0598  00                    DB
0599  00                    DB
059A  00                    DB
059B  00                    DB
059C  00                    DB
059D  00                    DB
059E  00                    DB
059F  00                    DB
05A0  BD          SEGTAB    DB
05A1  30                    DB
05A2  9B                    DB
05A3  BA                    DB
05A4  36                    DB
05A5  AE                    DB
05A6  AF                    DB
05A7  38                    DB
05A8  BF                    DB
05A9  BE                    DB
05AA  3F                    DB
05AB  A7                    DB
05AC  8D                    DB
05AD  B3                    DB
05AE  8F                    DB
```



```
ADDR     OBJ        LABEL     MNEMONIC
====  ==========  ======  ==============

05AF  0F                    DB
05B0  00            BLANK   DB
05B1  00                    DB
05B2  00                    DB
05B3  00                    DB
05B4  00                    DB
05B5  00                    DB
05B6  00                    DB
05B7  00                    DB
05B8  0F                    DB
05B9  AE                    DB
05BA  8F                    DB
05BB  00                    DB
05BC  0F                    DB
05BD  00                    DB
05BE  00                    DB
05BF  00                    DB
1-SEG : 040C  2-SEG : 0417  A1    : 0275  A2    : 027C  A3    : 0286
ADRADD: 00FF  ADRDEC: 011E  ADREXC: 0133  ADRSUP: 02F7  B1    : 0294
B2    : 029A  B3    : 02A8  BEGIN : 0038  BUTEND: 02F0  BLANK : 05B0
BLOOP : 0298  BR1   : 00A0  BRANCH: 01B7  CH    : 0234  CHK 0 : 0246
CHK 1 : 0350  COUNT : 0326  DADP  : 0405  DELAY : 045E  DISP1 : 04CD
DISP2 : 04C9  DISP3 : 04CF  DISP4 : 04D8  DSTEP : 0156  DTAB  : 054F
DWX   : 039D  D&K1' : 03C3  EFIX  : 013A  ENDPWM: 014C  ENDTAP: 0174
ERR   : 0592  ERRDIS: 01E2  ERROR : 017A  ETAB  : 055B  EXT   : 0143
FILEDP: 01B1  FRQTAB: 04B0  GETP  : 02F4  GETBIT: 0302  GETTAP: 0351
GLOOP : 0316  GTBYTE: 0311  HAD   : 00DC  HDA   : 00D9  HFIX  : 00DE
HTAB  : 0537  HTAPWR: 00EC  IFIX  : 00FC  INI   : 0103  INTPWM: 0118
ISTEP : 0117  ITAB  : 0543  KADRS : 00BE  KCOL  : 03DA  KDATA : 00B5
KDEC  : 00AB  KEXEC : 00B0  KEYEXC: 0074  KEYMAP: 03AC  KEYTAB: 0567
KHEX  : 009A  KFUN  : 052D  KROW  : 03DC  KSUFUN: 05CC  KTAPWR: 00CC
LEAD  : 0187  LEAD1 : 018E  LEAD2 : 0198  LOOTBF: 0141  LOOTWR: 0157
MAIN  : 0069  MEMDP1: 020C  MEMDP2: 0215  MONMUS: 0403  MUSIC : 0400
NMI   : 0066  NOKEY : 03E2  OLOOP : 036E  OTBYTE: 03AF  OUT   : 0390
OUT1  : 0389  OUTBIT: 037B  PERIOD: 0343  PLAY  : 0441  PRECL1: 01F3
PRECL2: 0204  RAMCHK: 0395  RST1  : 0008  RST2  : 0010  RST5  : 0028
RST4  : 0020  RST5  : 002B  RST6  : 0030  RST7  : 0038  SOUDSP: 03BF
SCNX  : 03AC  SCPRE : 03AA  SEGTAB: 05A0  SETPT : 02CC  SETTIM: 0252
SHORTP: 0335  SONG  : 04DE  SOU1K : 02BA  SOU2K : 02CC  SOUN1 : 02DC
SOUN2K: 02D0  SOUND : 02D2  SQWAVE: 02B8  START : 0000  STEP04: 0072
STOP  : 0466  SUM   : 02E4  SUMCAL: 02E9  TAPEIN: 0304  TAPOUT: 035E
TERR  : 033E  TESTM : 0467  TLOOP : 0306  TONE  : 0452  TWOUT : 1457
TPFUN1: 010A  TPFUN2: 0129
```

CHAPTER 5 Monitor Utility And Their Application

5-1 Monitor Utility

Address	Name	Function
03C3H	D&K$_1$'	Scan display & keyboard once. Display character pattern in a fixed time interval.
039DH	D&K	Scan display & keyboard until one key is depressed.
040CH	1-SEG	Convert alow nibble digits to the display character pattern
0417H	2-SEG	Convert a byte (2 nibbles) to the display character patten, and save in memory.
03F9H	ADRSDP	Generate the character pattern in the address field of the display, and save in memory location 13C8H - 13CBH.
0405H	DADP	Generate the character pattern in the data field of the display, and save in memory location 13C6H - 13C7H.
0395H	RAM CHK	Check whether the address is available RAM.
02D2H	SOUND	Sound
02BAH	SOU 1K	Sound 1K HZ.
02C3H	SOU 2K	Sound 2K HZ.

5-1.1 D&K$_1$'

(Address) : 03C3H

(Function) : Scan display and keyboard once, Multiplex the six LED from right to left. It requires about 10 ms executed time. (accurate time 9.95 ms).

(Input Parameters) : IX point the lowest memory address which saves display character patterns.

(Output Parameters) : (1) IF no key is depressed, then carry flag is set.
(2) A key depression (except RST key) generates a 8-bit encoding of key position, and stores in Accumulator. Also, clear the carry flag. Refer to appendix A about the key-code.

(Registers) : AF, A'F', B'C', D'E' are destroyed !

(Appendix) : Display configuration.
(1) Each LED requires one byte data. It needs 6 bytes totally.
(2) Lowest significant byte represents the most right LED which IX pointed.

IX = program counter

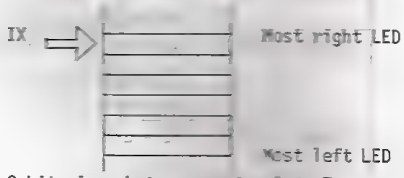

(3) 8 bits in a byte propotional to 7 segments and decimal point. The hardware is designed so that writing zero from a bit position turns off the corresponding LED segment.

5-1.2 D&K

(Address) : 039DH

(Function) : It is analogous to D&K$_1$', but has two difference
(1) D&K$_1$' just scans once, D&K will scan until one key is depressed.
(2) D&K$_1$' gets the position-code, but D&K translates into the internal-code. Refer to appendix A.

(Input Parameters) : IX points the lowest memory address which saves display character patterns.

(Output Parameters) : Internal-code in Accumulator.

(Registers) : AF, B, HL, A'F', B'C', D'E' are destroyed.

5-1.3 1-SEG

(Address) : 040CH
(Function) : Convert a byte into a digit display character.
(Input Parameters) : Low nibble of Accumulator
(Output Parameters) : Accumulator
(Registers) : AF are destroyed

5-1.4 2-SEG

(Address) : 0417H
(Function) : Convert two nibble of a byte (2 hexadecimal digits) into 2 display character form.
(Input Parameters) : High nibble of Accumulator for first digit, and low nibble for second digit.
(Output Parameters) : First display character is stored in (HL), second in (HL+1) and HL increases 2.
(Registers) : AF and HL are destroyed.

5-1.5 ADRSDP

(Address) : 03F9H
(Function) : Convert two bytes digit into four display characters.
(Input Parameters) : The address information stored in DE.
(Output Parameters) : If IX points to 13C8H, results will be in the address field of the display.
(Registers) : AF and HL are destroyed.

5-1.6 DADP

(Address) : 0405H
(Function) : Convert one byte digit to two display characters.
(Input Parameters) : Accumulator
(Output Parameters) : IF IX points to 13C6H, result will be in the data field of the display.
(Registers) : AF and HL are destroyed.

5-1.7 RAM CHK

(Address) : 0395H
(Function) : Check whether the memory address is the available RAM.
(Input Parameters) : HL point the memory address.
(Output Parameters) : (1) IF this location is occupied by RAM, then zero flag is set to 1.
(2) IF this location is occupied by ROM or is nonexist, then zero flag is reset.
(Registers) : AF are destoryed.

5-1.8 SOUND

(Address) : 02D2H
(Function) : Sounding speaker.
(Input Parameters) : (1) Register C control the frequency. The period equals to (44+Cx13)x2x0.56 μs. Convert period into frequency, is about 200/(10+3xC) KHZ.
(2) HL = time constant value is 32768 (MAX.).
(Output Parameters) : None
(Register) : AF, B, DE, HL are destroyed.

5-1.9 SOU 1K

(Address) : 02BAH
(Function) : Sounding with 1K frequency
(Input Parameters) : HL = time constant, 32768 (MAX.)
(Output Parameters) : None
(Registers) : All are destroyed.

5-1.10 SOU 2K

(Address) : 02C3H
(Function) : Sounding with 2KHz freqency.
(Input Parameters) : HL = time constant value is 32768 (MAX.)
(Output Parameters) : None
(Registers) : All are destroyed.

5-2 Examples of the monitor utility

In this section, introducing some examples to show how to use the monitor utility: D&K, D&K$_1$', 2-SEG, SOUND.

(Example 1): Display H E L P U S until [+] key is depressed (HALT indicator is turned on)

```
ADDR   OBJECT      LABEL   MNEMONIC
====   ==========  =====   ===============
1000   DD 21 20 10         LD    IX,HELP
1004   CD 9D 03    DISP    CALL  D&K
1007   FE 10               CP    10H
1009   20 F9               JR    NZ,DISP
100B   76                  HALT
1020   AE          HELP    DB
1021   B5                  DB
1022   1F                  DB
1023   85                  DB
1024   8F                  DB
1025   37                  DB
```

The relation between the characters to be displayed and corresponding address & data is as following:

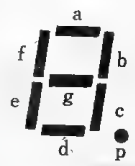

Position	Character Pattern	Lighting Segment	dpcbafge	Data	Address
right	S	a,c,d,f,g	10101110	AEH	1020H
	U	b,c,d,e,f	10110101	B5H	1021H
	P	a,b,e,f,g	00011111	1FH	1022H
	L	d,e,f	10000101	85H	1023H
	E	a,d,e,f,g	10001111	8FH	1024H
left	H	b,c,e,f,g	00110111	37H	1025H

The internal-code of each key refer to appendix A. [+] key = 10H

(Example 2): Flash 'HELP US'

Since D&K$_1$' refresh display once per 10 ms, if we want to flash display once per half second, we must change IY one times after CALL D&K$_1$' 50 times.

```
ADDR   OBJECT      LABEL   MNEMONIC
====   ==========  =====   ===============
1000   21 26 10            LD    HL,BLANK
1003   E5                  PUSH  HL
1004   DD 21 20 10         LD    IX,HELP
1008   DD E3       LOOP    EX    SP,IX
100A   06 32               LD    B,50
100C   CD C3 03    LOOP1   CALL  D&K
100F   10 FB               DJNZ  LOOP1
1011   18 F5               JR    LOOP
1020   AE          HELP    DB
1021   B5                  DB
1022   1F                  DB
1023   85                  DB
1024   8F                  DB
1025   37                  DB
1026   00          BLANK   DB
1027   00                  DB
1028   00                  DB
1029   00                  DB
102A   00                  DB
102B   00                  DB
```

Changing flashing speed, we can change the no. of calling D&K.'. It means change address 100BH contents. Changing display characters, we can modify the data in 1020H - 1025H.

(Example 3): Display the position and internal-code after a key depressed.

```
ADDR   OBJECT      LABEL   MNEMONIC
====   ==========  =====   ===============
1000   DD 21 00 11         LD    IX,OUTBF
1004   CD 9D 03    LOOP    CALL  D&K
1007   21 00 11            LD    HL,OUTBF
100A   CD 17 04            CALL  2-SEG
100D   18 F5               JR    LOOP
1100   00          OUTBF   DB
1101   00                  DB
1102   00                  DB
1103   00                  DB
1104   00                  DB
1105   00                  DB
```

If you clear 1100H - 1105H contents to zero, the display will be blanked. Then, the internal-code will display in the data field of the display after a key depression. You, reader, may check the display with appendix A.

If you want to know the original matrix position of key, you can modify main program as following:

```
ADDR   OBJECT      LABEL   MNEMONIC
====   ==========  =====   ================
1000   DD 21 00 11         LD    IX,OUTBF
1004   CD 9D 03    LOOP    CALL  D&K
1007   38 FB               JR    C,LOOP
1009   21 00 11            LD    HL,OUTBF
100C   CD 17 04            CALL  2-SEG
100F   18 F3               JR    LOOP
```

(Example 4): Convert 3 continuous bytes data six into display characters, and store in 6 continuous memory location.

```
ADDR   OBJECT      LABEL   MNEMONIC
====   ==========  =====   ================
1000   11 00 11            LD    DE,BYTE0
1003   21 03 11            LD    HL,1103H
1006   06 03               LD    B,3
1008   1A          LOOP    LD    A,(DE)
1009   CD 17 04            CALL  2-SEG
100C   13                  INC   DE
100D   10 F9               DJNZ  LOOP
100F   DD 21 03 11         LD    IX,1103H
1013   CD 9D 03            CALL  D&K
1016   76                  HALT
1100   10          BYTE0   DB
1101   32                  DB
1102   54                  DB
```

Put data in 1100H - 1102H. After program exits from loop, six display characters have converted. User may set breakpoint at 100FH to see whether the data is correct.

(Example 5): Sound of police car

You can simulate the sound of police car with two different frequency. Register C controls the frequency and register HL control the length of sound.

```
ADDR   OBJECT      LABEL   MNEMONIC
====   ==========  =====   ================
1000   0E 00       LOOP    LD    C,00H
1002   21 C0 00            LD    HL,00C0H
1005   CD D2 02            CALL  SOUND
1008   0E C0               LD    C,0C0H
100A   21 00 01            LD    HL,0100H
100D   CD D2 02            CALL  SOUND
1010   18 EE               JR    LOOP
```


(1) Low frequency part: C = 0 (=256), HL = 00H (=256)
Period = (44+13x256)x2x0.56 μs = 3777 μs
Frequency = 1/3777 μs ≅ 265 HZ
Length = 3777 μs x 192 = 0.73 sec.
(2) High frequency part: C = C0H (=192), HL = 0100H (=256)
Period = (44+13x192)x2x0.56 μs = 2843 μs
Frequency = 1/2286 μs ≅ 352 HZ
Length = 2286 μs x 256 = 0.73 sec.

(Example 6): Display 123456 patterns

```
ADDR   OBJECT      LABEL   MNEMONIC
====   ==========  =====   ================
1000   DD 21 40 10         LD    IX,1040H
1004   CD 9D 03            CALL  D&K
1040   AF                  DB
1041   AE                  DB
1042   36                  DB
1043   BA                  DB
1044   9B                  DB
1045   30                  DB
```

This example use the D&K subroutine store the start pattern address in IX, and CALL D&K, the routine will echo the six data which starts at IX, to the display. (Refer to appendix A about the character pattern transformation).

(Example 7): From left to right, display A b C d E F one by one

```
ADDR   OBJECT      LABEL   MNEMONIC
====   ==========  =====   ================
1000   DD 21 46 10         LD    IX,BLANK
1004   0E 06               LD    C,06H
1006   06 20       INI 1   LD    B,20H
1008   CD C3 03    INI 2   CALL  D&K1'
100B   10 FB               DJNZ  INI 2
100D   DD 2B               DEC   IX
100F   0D                  DEC   C
1010   20 F4               JR    NZ,INI 1
1012   CD 9D 03            CALL  D&K
1040   0F          F       DB
1041   8F          E       DB
1042   B3          D       DB
```

```
1043  8D                 DB
1044  A7                 DB
1045  3F                 DB
1046  00          BLANK  DB
1047  00                 DB
1048  00                 DB
1049  00                 DB
104A  00                 DB
104B  00                 DB
```

This routine use D&K$_1$'. It need 10 ms to executing D&K$_1$'. First place 20H (=32D) in Register B, then use DJNZ to decrease Register B contents, after calling D&K$_1$'. The program will do 32 times and delay 0.32 sec. Let IX point address (1046H) which will turn off the display. Then, decrease IX step by step, so display will light ABCDEF one by one. (IF you want to change the display time, you can modify Register B, the content of address 1007H)

(Example 8): Swap -SEOP- and -GO-- in display.

```
ADDR    OBJECT      LABEL     MNEMONIC
====  ============  =====  ===============
1000  DD 21 26 10   BEGIN  LD    IX,1026H
1004  06 32                LD    B,32H
1006  CD C3 03      LOOP1  CALL  D&K1'
1009  10 FB                DJNZ  LOOP1
100B  DD 21 20 10          LD    IX,1020H
100F  06 32                LD    B,32H
1011  CD C3 03      LOOP2  CD    D&K1'
1014  10 FB                DJNZ  LOOP2
1016  C3 00 10             JP    BEGIN
1020  02                   DB
1021  1F                   DB
1022  A3                   DB
1023  87                   DB
1024  AE                   DB
1025  02                   DB
1026  00                   DB
1027  02                   DB
1028  A3                   DB
1029  AD                   DB
102A  02                   DB
102B  00                   DB
```

Using D&K$_1$' which needs 10 ms executing time, it need to change IX after calling D&K$_1$' 50 time if you want to flash display each half second.

(Example 9): Press [-] key to blank the display, press [+] key to display -HELLO one by one character.

```
ADDR    OBJECT      LABEL     MNEMONIC
====  ============  =====  ===============
1000  DD 21 40 10   START  LD    IX,HELLO
1004  CD 9D 03      DISP1  CALL  D&K
1007  FE 11                CP    11H
1009  20 F9                JR    NZ,DISP1
100B  DD 21 46 10          LD    IX,BLANK
100F  CD 9D 03      DISP2  CALL  D&K
1012  FE 10                CP    10H
1014  20 F9                JR    NZ,DISP2
1016  DD 21 46 10          LD    IX,BLANK
101A  0E 06                LD    C,06H
101C  06 20         INI 1  LD    B,20H
101E  CD C3 03      INI 2  CALL  D&K1'
1021  10 FB                DJNZ  INI 2
1023  DD 2B                DEC   IX
1025  0D                   DEC   C
1026  20 F4                JR    NZ,INI 1
1028  18 D6                JR    START
1040 BD 85 85 8F 37 00
BLANK
1046 00 00 00 00 00 00
```

(Example 10): TONE LED Control

Using 8255 PC$_7$ output "HI" and "Low" to flash TONE LED.

```
ADDR    OBJECT      LABEL     MNEMONIC
====  ============  =====  ===============
1000  3E 90                LD    A,90H
1002  D3 83                OUT   (CWR),A
1004  3E 80         START  LD    A,80H
1006  D3 82                OUT   (PC),A
1008  06 50                LD    B,50H
100A  CD 1D 10      LOOP1  CALL  DALEY
100D  10 FB                DJNZ  LOOP1
100F  3E 00                LD    A,00H
1011  D3 82                OUT   (PC),A
1013  06 50                LD    B,50H
1015  CD 1D 10      LOOP2  CALL  DELAY
1018  10 FB                DJNZ  LOOP2
101A  C3 04 10             JP    START
101D  0E FF         DELAY  LD    C,0FFH
101F  0D            LOOP3  DEC   C
1020  20 FD                JR    NZ,LOOP3
1022  C9                   RET
```

(Example 11): Sequential light control

Using 8255 PORT B output to turn on LED sequentially. Only one LED will turn on at any time. After a preset delay time, it will turn on next LED. (Program adds. HL and DE until the result is zero. It exhausts program execution time, and delay the program).

```
ADDR  OBJECT      LABEL  MNEMONIC
====  ==========  =====  ================
1000  3E 90       00 00  LD   A,90H
1002  D3 83       60 00  OUT  (CWR),A
1004  3E 01              LD   A,01H
1006  D3 81        NEXT  OUT  (PB),A
1008  47                 LD   B,A
1009  21 00 00           LD   HL,0000H
100C  11 01 00           LD   DE,0001H
100F  ED 5A        LOOP  ADC  HL,DE
1011  C2 0F 10           JP   NZ,LOOP
1014  78                 LD   A,B
1015  07                 RLCA
1016  C3 06 10           JP   NEXT
```

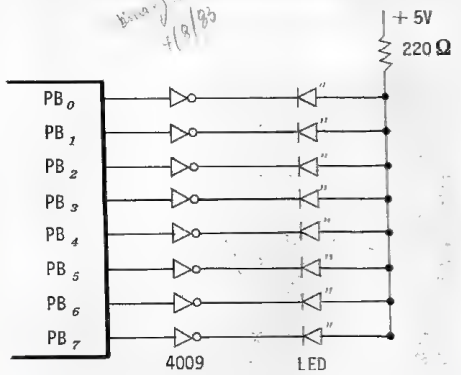

Example 12): Stopwatch

This program is a 1/100 sec stopwatch.It use D&K,', which delays 1/100 sec, As A time base.


```
ADDR  OBJECT      LABEL  MNEMONIC
====  ==========  =====  ================
1000  DD 21 00 11        LD   IX,1100H
1004  11 00 00           LD   DE,0000H
1007  CD C3 03    LOOP   CALL D&K,'
100A  30 FB              JR   NC,LOOP
100C  7B                 LD   A,E
100D  C6 01              ADD  A,01H
100F  27                 DAA
1010  5F                 LD   E,A
1011  7A                 LD   A,D
1012  CE 00              ADC  A,00H
1014  27                 DAA
1015  57                 LD   D,A
1016  7B                 LD   A,E
1017  21 00 11           LD   HL,1100H
101A  CD 17 04           CALL D-SEG
101D  36 02              LD   (HL),02H
101F  23                 INC  HL
1020  7A                 LD   A,D
1021  CD 17 04           CALL D-SEG
1024  36 00              LD   (HL),00H
1026  18 DF              JR   LOOP
```

(Example 13): Electronic Organ

This program make PET-80 to be a simple electronic organ. (2" 0 - KEY F is used as note key. When these key are depressed, it will sound different music scale.

```
ADDR  OBJECT      LABEL  MNEMONIC
====  ==========  =====  ================
1000  DD 21 B0 05 START  LD   IX,BLANK
1004  CD 9D 03           CALL D&K
1007  21 23 10           LD   HL,1023H
100A  85                 ADD  A,L
100B  6F                 LD   L,A
100C  3E C0              LD   A,0C0H
100E  D3 82        LOOP  OUT  (PC),A
1010  46                 LD   B,(HL)
1011  00            DELAY NOP
1012  00                 NOP
1013  00                 NOP
1014  10 FB               DJNZ DELAY
1016  EE 80              XOR  80H
1018  4F                 LD   C,A
1019  DB 80              IN   A,(PA)
101B  F6 C0              OR   0C0H
101D  3C                 INC  A
101E  79                 LD   A,C
101F  28 DF              JR   Z,START
1021  18 EB              JR   LOOP
1023  B2                 DB
1024  AB                 DB
```

```
1025  96                DB
1026  85                DB
1027  7E                DB
1028  70                DB
1029  64                DB
102A  59                DB
102B  54                DB
102C  4A                DB
102D  42                DB
102E  3E                DB
102F  37                DB
1030  31                BD
1031  2C                BD
1032  29                DB
```

(Example 14): Bell

PET-80 can simulate the telephone ringing. The bell is composed of one second ringing and two seconds silence. The program sounding 320 HZ and 480 HZ 50 ms alternately. The program starts at address 1000H.

```
ADDR    OBJECT     LABEL     MNEMONIC
====  ============  =====  ================
1000  3E 14        BEGIN  LD    A,14H
1002  08           RING   EX    AF,AF'
1003  0E D3               LD    C,0D3H
1005  21 08 00            LD    HL,0008H
1008  CD D2 02            CALL  SOUND
100B  0E 8C               LD    C,8CH
100D  21 0C 00            LD    HL,000CH
1010  CD D2 02            CALL  SOUND
1013  08                  EX    AF,AF'
1014  3D                  DEC   A
1015  20 EB               JR    NZ,RING
1017  01 50 33            LD    BC,3350H
101A  CD 2F 10            CALL  DELAY
101D  18 E1               JR    BEGIN
101F  0E A8        BUSY   LD    C,0A8H
1021  21 C8 00            LD    HL,00C8H
1024  CD D2 02            CALL  SOUND
1027  01 D4 30            LD    BC,30D4H
102A  CD 2F 10            CALL  DELAY
102D  18 F0               JR    BUSY
102F  E3           DELAY  EX    (SP),HL
1030  E3                  EX    (SP),HL
1031  ED A1               CPI
1033  E0                  RET   PO
1034  18 F9               JR    DELAY
```


From address 101FH, program can sound telephone busy tone. Busy tone is compose of sounding 0.5 second 400 HZ, and 0.5 second silence.

(Example 15): Wheel of forture

Turn on one segment, and rotate around the display. When the [+] key is depressed display stops running. And it will continue to rotate when a key depression, excepted RST, is detected.

```
ADDR    OBJECT     LABEL     MNEMONIC
====  ============  =====  ================
1000  21 40 10     INI    LD    HL,TABLE
1003  DD 21 00 11         LD    IX,OUTBF
1007  CD 30 10     LOOP   CALL  CLRBF
100A  5E                  LD    E,(HL)
100B  1C                  INC   E
100C  28 F2               JR    Z,INI
100E  1D                  DEC   E
100F  16 00               LD    D,00H
1011  DD 19               ADD   IX,DE
1013  23                  INC   HL
1014  7E                  LD    A,(HL)
1015  DD 77 00            LD    (IX),A
1018  DD 21 00 11         LD    IX,OUTBF
101C  06 03               LD    B,03H
101E  CD C3 03     LIGHT  CALL  D&K1'
1021  38 01               JR    C,NSCAN
1023  4F                  LD    C,A
1024  10 F8        NSCAN  DJNZ  LIGHT
1026  79                  LD    A,C
1027  FE 03               CP    03H
1029  28 02               JR    Z,STOP
102B  23                  INC   HL
102C  23                  inc   HL
102D  2B           STOP   DEC   HL
102E  18 D7               JR    LOOP
1030  06 06        CLRBF  LD    B,06H
1032  DD 36 00 00  CRL    LD    (IX),0000H
1036  DD 23               INC   IX
1038  10 F8               DJNZ  CLR
103A  11 FA FF            LD    DE,0FFFAH
103D  DD 19               ADD   IX,DE
103F  C9                  RET
                   TABLE
1040  05 08 04 08 03 08 02 08 01 08 00 08 00 10 00 20
1050  00 80 01 80 02 80 03 80 04 80 05 80 05 [illegible]
1060  FF
```

1061.

(Example 16): CLOCKS

Using software to delay PET-80 CLOCK (1.79M HZ). After clocks accumulated to one second, then program displays the new time.

```
ADDR  OBJECT       LABEL   MNEMONIC
====  ===========  =====   ================
1000  F3                   DI
1001  DD 21 03 12          LD    IX,OUTBF
1005  06 64        CLOCK   LD    B,64H
1007  CD C3 03     LOOP1   CALL  D&K1'
100A  10 FB                DJNZ  LOOP1
100C  CD 17 10             CALL  TMUPD
100F  CD 2F 10             CALL  BFUPD
1012  00           LOOP2   NOP
1013  10 FD                DJNZ  LOOP2
1015  18 EE                JR    CLOCK
1017  21 47 10     TMUPD   LD    HL,1047H
101A  11 00 12             LD    DE,1200H
101D  06 03                LD    B,03H
101F  37                   SCF
1020  1A           TMINC   LD    A,(DE)
1021  CE 00                ADC   A,00H
1023  27                   DAA
1024  12                   LD    (DE),A
1025  96                   SUB   (HL)
1026  38 01                JR    C,COMPL
1028  12                   LD    (DE),A
1029  3F           COMPL   CCF
102A  23                   INC   HL
102B  13                   INC   DE
102C  10 F2                DJNZ  TMINC
102E  C9                   RET
102F  21 03 12     BFUPD   LD    HL,OUTBF
1032  11 00 12             LD    DE,1200H
1035  06 03                LD    B,03H
1037  1A           PUTBF   LD    A,(DE)
1038  CD 17 04             CALL  2-SEG
103B  13                   INC   DE
103C  10 F9                DJNZ  PUTBF
103E  2B                   DEC   HL
103F  2B                   DEC   HL
1040  CB F6                SET   6,(HL)
1042  2B                   DEC   HL
1043  2B                   DEC   HL
1044  CB F6                SET   6,(HL)
1046  C9                   RET
1047  60                   DB
1048  60                   DB
1049  12                   DB
```


1200H: second buffer
1201H: minute buffer
1202H: hour buffer

If you want to adjust the starting time, you can preset the time data in these buffer.

(Example 17): Traffic lights

This program simulates the real traffic light's operation. In the cross-road, there are A, B two sets of traffic lights. It is independent of the red, yellow, green lights. The flash times of the yellow light is adjustable. Because the red time is equal to the green time of the other set, adjust the red time, also adjust the other set's green time.

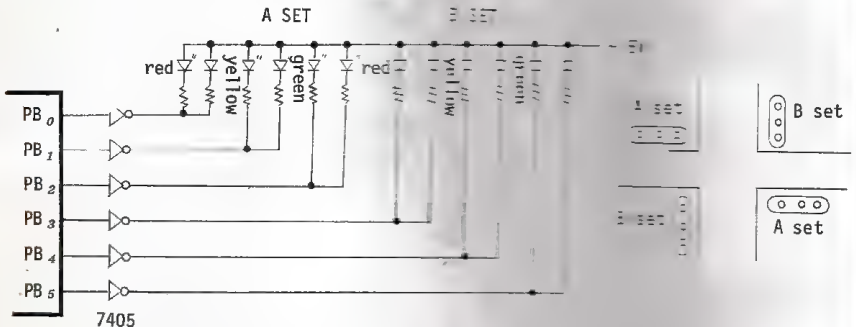


```
ADDR  OBJECT       LABEL   MNEMONIC
====  ===========  =====   ================
1000  3E 90                LD    A,90H
1002  D3 83                OUT   (CWR),A
1004  3E 0C        START   LD    A,0CH
1006  D3 81                OUT   (PB),A
1008  0E 07                LD    C,07H
100A  CD 49 10             CALL  DELAY
100D  06 03                LD    B,03H
100F  3E 0A        LOOP1   LD    A,0AH
1011  D3 81                OUT   (PB),A
1013  0E 01                LD    C,01H
1015  CD 49 10             CALL  DELAY
1018  3E 08                LD    A,08H
101A  D3 81                OUT   (PB),A
101C  0E 01                LD    C,01H
```

```
101E  CD 49 10            CALL  DELAY
1021  05                  DEC   B
1022  C2 0F 10            JP    NZ,LOOP1
1025  3E 21               LD    A,21H
1027  D3 81               OUT   (PB),A
1029  0E 07               LD    C,07H
102B  CD 49 10            CALL  DELAY
102E  06 03               LD    B,03H
1030  3E 11         LOOP2 LD    A,11H
1032  D3 81               OUT   (PB),A
1034  0E 01               LD    C,01H
1036  CD 49 10            CALL  DELAY
1039  3E 01               LD    A,01H
103B  D3 81               OUT   (PB),A
103D  0E 01               LD    C,01H
103F  CD 49 10            CALL  DELAY
1042  05                  DEC   B
1043  C2 30 10            JP    NZ,LOOP2
1046  C3 04 10            JP    START
1049  11 00 B0      DELAY LD    DE,B000H
104C  1B             WAT   DEC   DE
104D  7A                   LD    A,D
104E  B3                   OR    E
104F  C2 4C 10             JP    NZ,WAT
1052  0D                   DEC   C
1053  C2 49 10             JP    NZ,DELAY
1056  C9                   RET
```

(Example 18): Using D/A converter, the PET-80 can display graph on the scope.

```
ADDR    OBJECT      LABEL     MNEMONIC
====    ==========  =====     ================
1000  3E 90                   LD    A,90H
1002  D3 83                   OUT   (CWR),A
1004  21 40 10      BEGIN     LD    HL,1040H
1007  7E            DISP      LD    A,(HL)
1008  FE 00                   CP    00H
100A  CA 04 10                JP    Z,BEGIN
100D  D3 81                   OUT   (PB),A
100F  CD 16 10                CALL  DELAY
1012  23                      INC   HL
1013  C3 07 10                JP    DISP
1016  0E FF          DELAY     LD    C,0FFH
1018  0D             LOOP      DEC   C
1019  C2 18 10                JP    NZ,LOOP
101C  C9                      RET
                  -----DATA------
1040  92 82 72 62 A3 53 B4 44 C5 95 85 75 65 35 A6 56
1050  26 D7 27 D8 28 D9 A9 99 69 59 29 CA 3A BB 4B AC
1060  5C 9D 8D 7D 6D BE AE BE 7E 5E 4E 9E 6F 00
```

control word = 90 in this case.

for minimum delay put 01 H.

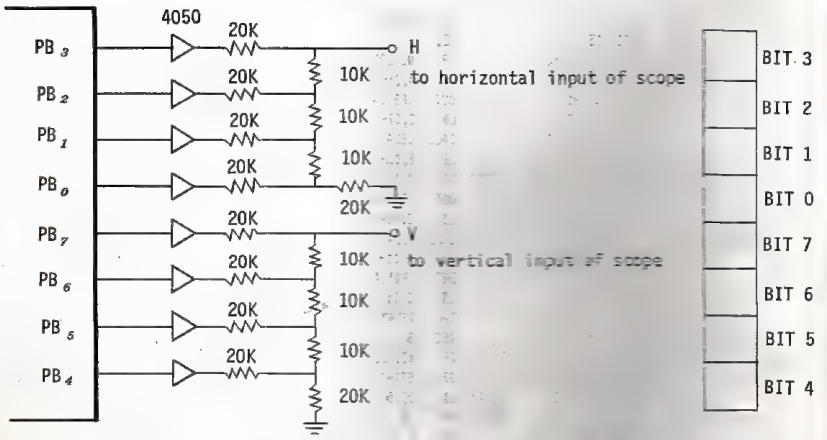

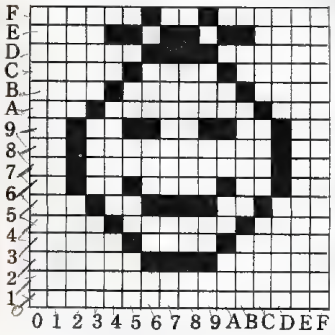

Plot the graph on the 16 x 16 graph paper and encode it (low nibble for vertical position, high nibble for horizontal position).

HL points the starting address of data. Data zero indicates the end of display data. Register C is used as delaying program.

(Example 19): Computer music

Using monitor untility to play music

```
ADDR    OBJECT      LABEL     MNEMONIC
====    ============ =====  ===============
1000  FD 21 08 10            LD    IY,1008H
1004  CD 2C 04               CALL  MUSIC
1007  76                     HALT
          ------DATA------
1008  0C 06 0C 02 0C 04 15 03 13 01 11 10 13 06 13 02
1018  13 04 15 03 11 01 13 10 18 06 11 02 11 04 0E 04
1028  16 06 15 02 13 08 10 06 0C 02 0C 03 0E 01 10 03
1038  13 01 11 10 40
```

String evcoding

mnisvc scale											
Code Do code	00	01	02	03	04	05	06	07	08	09	0A
0B	0C	0D	0E	0F	10	11	12	13	14	15	16
17	18	19	1A	1B	1C	1D	1E	1F	20	40	80
									rest	re-peat	stop

APPENDIX A

character pattern position-code & internal-code

7	6	5	4	3	2	1	0
d	p	c	b	a	f	g	e

DISPLAY FORMAT:

CODE	BD	30	9B	BA	36	AE	AF	38	BF	BE	3F	A7	8D	B3
DATA	0	1	2	3	4	5	6	7	8	9	A	B	C	D
DISP	0	1	2	3	4	5	6	7	8	9	A	b	C	d
CODE	8F	0F	AD	37	20	B1	B7	BE	39	31	A3	F	3E	03
DATA	E	F	G	H	I	J	K	L	M	N	O	P	Q	R
DISP	E	F	G	H	I	J	K	L	M	N	O	P	Q	r
CODE	AE	87	B5	A1	A9	07	B6	B4	B0	A0	30	02	00	00
DATA	S	T	U	V	W	X	Y	Z			-	-	.	
DISP	S	t	U	u	V	X	Y	Z			-	-	.	

	C 18	D 12	E 0C	F 08	ADRS 00
TO TAPE 1F	8 19	9 13	A 0D	B 07	DATA 01
FROM TAPE 20	4 1A	5 14	6 0E	7 08	— 02
EXEC 21	0 1B	1 15	2 0F	3 09	+ 03

Position-Code(CALL D&K!')

	C	D	E	F	ADRS
	18	12	0C	08	00
TO TAPE 1F	8 19	9 13	A 0D	B 07	DATA 01
FROM TAPE 20	4 1A	5 14	6 0E	7 08	— 02
EXEC 21	0 1B	1 15	2 0F	3 09	+ 03

Z80, Z80A-CPU Pin Description

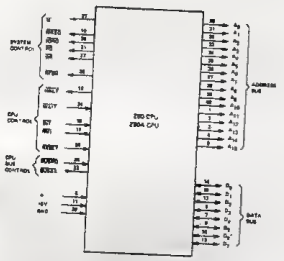

Z80, Z80A CPU PIN CONFIGURATION

A_0-A_{15} (Address Bus) Tri-state output, active high. A_0-A_{15} constitute a 16-bit address bus. The address bus provides the address for memory (up to 64K bytes) data exchanges and for I/O device data exchanges.

D_0-D_7 (Data Bus) Tri-state input/output, active high. D_0-D_7 constitute an 8-bit bidirectional data bus. The data bus is used for data exchanges with memory and I/O devices.

$\overline{M_1}$ (Machine Cycle one) Output, active low. $\overline{M_1}$ indicates that the current machine cycle is the OP code fetch cycle of an instruction execution.

$\overline{MREQ}$ (Memory Request) Tri-state output, active low. The memory request signal indicates that the address bus holds a valid address for a memory read or memory write operation.

$\overline{IORQ}$ (Input/ Output Request) Tri-state output, active low. The $\overline{IORQ}$ signal indicates that the lower half of the address bus holds a valid I/O address for a I/O read or write operation. An $\overline{IORQ}$ signal is also generated when an interrupt is being acknowledged to indicate that an interrupt response vector can be placed on the data bus.

$\overline{RD}$ (Memory Read) Tri-state output, active low. $\overline{RD}$ indicates that the CPU wants to read data from memory or an I/O device. The addressed I/O device or memory should use this signal to gate data onto the CPU data bus.

$\overline{WR}$ (Memory Write) Tri-state output, active low. $\overline{WR}$ indicates that the CPU data bus holds valid data to be stored in the addressed memory or I/O device.

$\overline{RFSH}$ (Refresh) Output, active low. $\overline{RFSH}$ indicates that the lower 7 bits of the address bus contain a refresh address for dynamic memories and the current $\overline{MREQ}$ signal should be used to do a refresh read to all dynamic memories.

$\overline{HALT}$ (Halt state) Output, active low. $\overline{HALT}$ indicates that the CPU has executed a HALT software instruction and is awaiting either a non-maskable or a maskable interrupt (with the mask enabled) before operation can resume. While halted, the CPU executes NOP's to maintain memory refresh activity.

$\overline{WAIT}$ (Wait) Input, active low. $\overline{WAIT}$ indicates to the Z-80 CPU that the addressed memory or I/O devices are not ready for a data transfer. The CPU continues to enter wait states for as long as this signal is active.

$\overline{INT}$ (Interrupt Request) Input, active low. The Interrupt Request signal is generated by I/O devices. A request will be honored at the end of the current instruction if the internal software controlled interrupt enable flip-flop (IFF) is enabled.

$\overline{NMI}$ (Non Maskable Interrupt) Input, active low. The non-maskable interrupt request line has a higher priority than $\overline{INT}$ and is always recognized at the end of the current instruction, independent of the status of the interrupt enable flip-flop. $\overline{NMI}$ automatically forces the Z-80 CPU to restart to location 0066_H.

$\overline{RESET}$ Input, active low. $\overline{RESET}$ initializes the CPU as follows: reset interrupt enable flip-flop, clear PC and registers I and R and set interrupt to 8080A mode. During reset time, the address and data bus go to a high impedance state and all control output signals go to the inactive state.

$\overline{BUSRQ}$ (Bus Request) Input, active low. The bus request signal has a higher priority than $\overline{NMI}$ and is always recognized at the end of the current machine cycle and is used to request the CPU address bus, data bus and tri-state output control signals to go to a high impedance state so that other devices can control these busses.

$\overline{BUSAK}$ (Bus Acknowledge) Output, active low. Bus acknowledge is used to indicate to the requesting device that the CPU address bus, data bus and tri-state control bus signals have been set to their high impedance state and the external device can now control these signals.

Silicon Gate MOS 8255

PROGRAMMABLE PERIPHERAL INTERFACE

- **24 Programmable I/O Pins**
- **Completely TTL Compatible**
- **Fully Compatible with MCS™-8 and MCS™-80 Microprocessor Families**
- **Direct Bit Set/Reset Capability Easing Control Application Interface**
- **40 Pin Dual In-Line Package**
- **Reduces System Package Count**

The 8255 is a general purpose programmable I/O device designed for use with both the 8008 and 8080 microprocessors. It has 24 I/O pins which may be individually programmed in two groups of twelve and used in three major modes of operation. In the first mode (Mode 0), each group of twelve I/O pins may be programmed in sets of 4 to be input or output. In Mode 1, the second mode, each group may be programmed to have 8 lines of input or output. Of the remaining four pins three are used for handshaking and interrupt control signals. The third mode of operation (Mode 2) is a Bidirectional Bus mode which uses 8 lines for a bidirectional bus, and five lines, borrowing one from the other group, for handshaking.

Other features of the 8255 include bit set and reset capability and the ability to source 1mA of current at 1.5 volts. This allows darlington transistors to be directly driven for applications such as printers and high voltage displays.

PIN CONFIGURATION

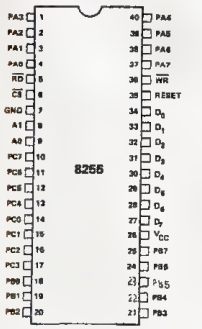

PIN NAMES

D_7–D_0	DATA BUS (BI-DIRECTIONAL)
RESET	RESET INPUT
$\overline{CS}$	CHIP SELECT
$\overline{RD}$	READ INPUT
$\overline{WR}$	WRITE INPUT
A0, A1	PORT ADDRESS
PA7-PA0	PORT A (BIT)
PB7-PB0	PORT B (BIT)
PC7-PC0	PORT C (BIT)
V_{CC}	+5 VOLTS
GND	0 VOLTS

8255 BLOCK DIAGRAM

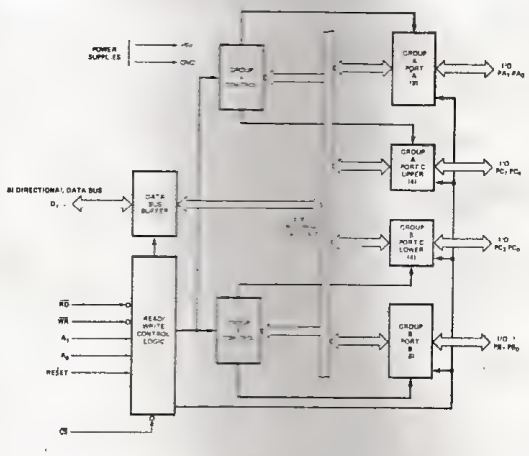

8255 BASIC FUNCTIONAL DESCRIPTION

General

The 8255 is a Programmable Peripheral Interface (PPI) device designed for use in 8080 Microcomputer Systems. Its function is that of a general purpose I/O component to interface peripheral equipment to the 8080 system bus. The functional configuration of the 8255 is programmed by the system software so that normally no external logic is necessary to interface peripheral devices or structures.

Data Bus Buffer

This 3-state, bi-directional, eight bit buffer is used to interface the 8255 to the 8080 system data bus. Data is transmitted or received by the buffer upon execution of INput or OUTput instructions by the 8080 CPU. Control Words and Status information are also transferred through the Data Bus buffer.

Read/Write and Control Logic

The function of this block is to manage all of the internal and external transfers of both Data and Control or Status words. It accepts inputs from the 8080 CPU Address and Control busses and in turn, issues commands to both of the Control Groups.

($\overline{CS}$)

Chip Select: A "low" on this input pin enables the communication between the 8255 and the 8080 CPU.

($\overline{RD}$)

Read: A "low" on this input pin enables the 8255 to send the Data or Status information to the 8080 CPU on the Data Bus. In essence, it allows the 8080 CPU to "read from" the 8255.

($\overline{WR}$)

Write: A "low" on this input pin enables the 8080 CPU to write Data or Control words into the 8255.

(A_0 and A_1)

Port Select 0 and Port Select 1: These input signals, in conjunction with the $\overline{RD}$ and $\overline{WR}$ inputs, control the selection of one of the three ports or the Control Word Register. They are normally connected to the least significant bits of the Address Bus (A_0 and A_1).

8255 BASIC OPERATION

A_1	A_0	$\overline{RD}$	$\overline{WR}$	$\overline{CS}$	INPUT OPERATION (READ)
0	0	0	1	0	PORT A → DATA BUS
0	1	0	1	0	PORT B → DATA BUS
1	0	0	1	0	PORT C → DATA BUS
					OUTPUT OPERATION (WRITE)
0	0	1	0	0	DATA BUS → PORT A
0	1	1	0	0	DATA BUS → PORT B
1	0	1	0	0	DATA BUS → PORT C
1	1	1	0	0	DATA BUS → CONTROL
					DISABLE FUNCTION
X	X	X	X	1	DATA BUS → 3-STATE
1	1	0	1	0	ILLEGAL CONDITION

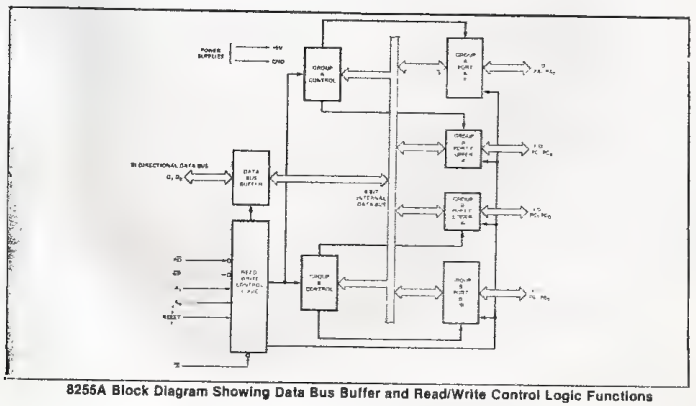

8255A Block Diagram Showing Data Bus Buffer and Read/Write Control Logic Functions

(RESET)

Reset: A "high" on this input clears all internal registers including the Control Register and all ports (A, B, C) are set to the input mode.

Group A and Group B Controls

The functional configuration of each port is programmed by the systems software. In essence, the 8080 CPU "outputs" a control word to the 8255. The control word contains information such as "mode", "bit set", "bit reset" etc. that initializes the functional configuration of the 8255.

Each of the Control blocks (Group A and Group B) accepts "commands" from the Read/Write Control Logic, receives "control words" from the internal data bus and issues the proper commands to its associated ports.

Control Group A – Port A and Port C upper (C7-C4)
Control Group B – Port B and Port C lower (C3-C0)

The Control Word Register can Only be written into. No Read operation of the Control Word Register is allowed.

Ports A, B, and C

The 8255 contains three 8-bit ports (A, B, and C). All can be configured in a wide variety of functional characteristics by the system software but each has its own special features or "personality" to further enhance the power and flexibility of the 8255.

Port A: One 8-bit data output latch/buffer and one 8-bit data input latch.

Port B: One 8-bit data input output latch/buffer and one 8-bit data input buffer.

Port C: One 8-bit data output latch/buffer and one 8-bit data input buffer (no latch for input). This port can be divided into two 4-bit ports under the mode control. Each 4-bit port contains a 4-bit latch and it can be used for the control signal outputs and status signal inputs in conjunction with Ports A and B.

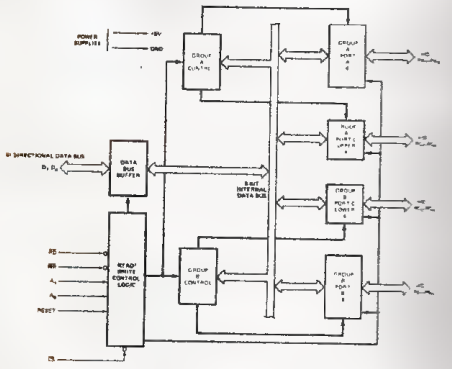

8225A Block Diagram Showing Group A and Group B Control Functions

PIN CONFIGURATION

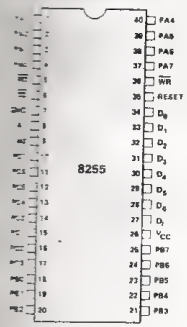

PIN NAMES

D_0-D_7	DATA BUS (BI-DIRECTIONAL)
RESET	RESET INPUT
$\overline{CS}$	CHIP SELECT
$\overline{RD}$	READ INPUT
$\overline{WR}$	WRITE INPUT
A_0, A_1	PORT ADDRESS
PA0-PA7	PORT A (BIT)
PB0-PB7	PORT B (BIT)
PC0-PC7	PORT C (BIT)
V_{CC}	+5 VOLTS
GND	0 VOLTS

8255 DETAILED OPERATIONAL DESCRIPTION

Mode Selection

There are three basic modes of operation that can be selected by the system software:

Mode 0 – Basic Input/Output
Mode 1 – Strobed Input/Output
Mode 2 – Bi-Directional Bus

When the RESET input goes "high" all ports will be set to the Input mode (i.e., all 24 lines will be in the high impedance state). After the RESET is removed the 8255 can remain in the Input mode with no additional initialization required. During the execution of the system program any of the other modes may be selected using a single OUTput instruction. This allows a single 8255 to service a variety of peripheral devices with a simple software maintenance routine.

The modes for Port A and Port B can be separately defined, while Port C is divided into two portions as required by the Port A and Port B definitions. All of the output registers, including the status flip-flops, will be reset whenever the mode is changed. Modes may be combined so that their functional definition can be "tailored" to almost any I/O structure. For instance; Group B can be programmed in Mode 0 to monitor simple switch closings or display computational results, Group A could be programmed in Mode 1 to monitor a keyboard or tape reader on an interrupt-driven basis.

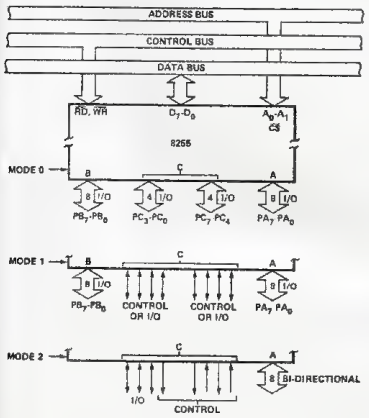

Basic Mode Definitions and Bus Interface

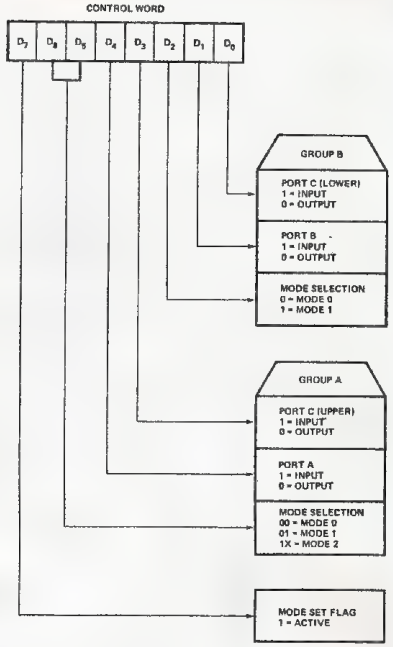

Mode Definition Format

The Mode definitions and possible Mode combinations may seem confusing at first but after a cursory review of the complete device operation a simple, logical I/O approach will surface. The design of the 8255 has taken into account things such as efficient PC board layout, control signal definition vs PC layout and complete functional flexibility to support almost any peripheral device with no external logic. Such design represents the maximum use of the available pins.

Single Bit Set/Reset Feature

Any of the eight bits of Port C can be Set or Reset using a single OUTput instruction. This feature reduces software requirements in Control-based applications.

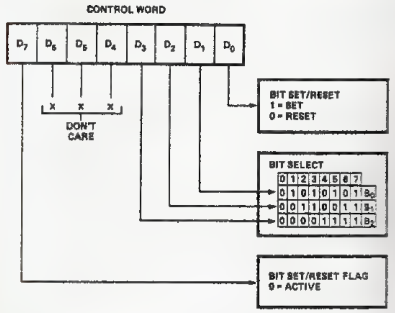

Bit Set/Reset Format

When Port C is being used as status/control for Port A or B, these bits can be set or reset by using the Bit Set/Reset operation just as if they were data output ports.

Interrupt Control Functions

When the 8255 is programmed to operate in Mode 1 or Mode 2, control signals are provided that can be used as interrupt request inputs to the CPU. The interrupt request signals, generated from Port C, can be inhibited or enabled by setting or resetting the associated INTE flip-flop, using the Bit set/reset function of Port C.

This function allows the Programmer to disallow or allow a specific I/O device to interrupt the CPU without effecting any other device in the interrupt structure.

INTE Flip-Flop definition:

(BIT-SET) – INTE is SET – interrupt enable
(BIT-RESET) – INTE is RESET – interrupt disable

Note: All Mask flip-flops are automatically reset during mode selection and device Reset.

2716*
16K (2K × 8) UV ERASABLE PROM

- **Fast Access Time**
  - — 350 ns Max. 2716-1
  - — 390 ns Max. 2716-2
  - — 450 ns Max. 2716
- **Single +5V Power Supply**
- **Low Power Dissipation**
  - — 525 mW Max. Active Power
  - — 132 mW Max. Standby Power
- **Pin Compatible to 5V ROMs (2316E, 2332, and 2364) and 2732 EPROM**
- **Simple Programming Requirements Single Location Programming Programs with One 50 ms Pulse**
- **Inputs and Outputs TTL Compatible during Read and Program**
- **Completely Static**

The 2716 is a 16,384-bit ultraviolet erasable and electrically programmable read-only memory (EPROM). The 2716 operates from a single 5-volt power supply, has a static standby mode, and features fast single address location programming. It makes designing with EPROMs faster, easier and more economical. For production quantities, the 2716 user can convert rapidly to Intel's pin-for-pin compatible 16K ROM (the 2316E) or the new 32K and 64K ROMs (the 2332 and 2364 respectively).

The 2716, with its single 5-volt supply and with an access time up to 350 ns, is ideal for use with the newer high performance +5V microprocessors such as Intel's 8085 and 8086. The 2716 is also the first EPROM with a static standby mode which reduces the power dissipation without increasing access time. The maximum active power dissipation is 525 mW while the maximum standby power dissipation is only 132 mW, a 75% savings.

The 2716 has the simplest and fastest method yet devised for programming EPROMs — single pulse TTL level programming. No need for high voltage pulsing because all programming controls are handled by TTL signals. Now, it is possible to program on-board, in the system, in the field. Program any location at any time — either individually, sequentially or at random, with the 2716's single address location programming. Total programming time for all 16,384 bits is only 100 seconds.

PIN CONFIGURATION*

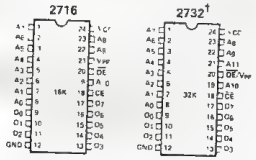

†Refer to 2732 data sheet for specifications

MODE SELECTION

MODE (PINS)	CE/PGM (18)	OE (20)	VPP (21)	VCC (24)	OUTPUTS (9-11, 13-17)
Read	VIL	VIL	+5	+5	DOUT
Standby	VIH	Don't Care	+5	+5	High Z
Program	Pulsed VIL to VIH	VIH	+25	+5	DIN
Program Verify	VIL	VIL	+25	+5	DOUT
Program Inhibit	VIH	VIH	+25	+5	High Z

PIN NAMES

A_0–A_{10}	ADDRESSES
$\overline{CE}$/PGM	CHIP ENABLE PROGRAM
$\overline{OE}$	OUTPUT ENABLE
O_0–O_7	OUTPUTS

BLOCK DIAGRAM

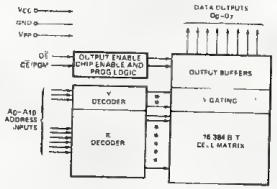

Pin 18 and pin 20 have been renamed to conform with the entire family of 16K, 32K, and 64K EPROMs and ROMs. The die, fabrication process, and specifications remain the same and are totally uneffected by this change.

2114
1024 X 4 BIT STATIC RAM

	2114-2	2114-3	2114	2114L2	2114L3	2114L
Max. Access Time (ns)	200	300	450	200	300	450
Max. Power Dissipation (mw)	525	525	525	370	370	370

- **High Density 18 Pin Package**
- **Identical Cycle and Access Times**
- **Single +5V Supply**
- **No Clock or Timing Strobe Required**
- **Completely Static Memory**
- **Directly TTL Compatible: All Inputs and Outputs**
- **Common Data Input and Output Using Three-State Outputs**
- **Pin-Out Compatible with 3605 and 3625 Bipolar PROMs**

The 2114 is a 4096-bit static Random Access Memory organized as 1024 words by 4 bits using N-channel Silicon-Gate MOS technology. It uses fully DC stable (static) circuitry throughout — in both the array and the decoding — and therefore requires no clocks or refreshing to operate. Data access is particularly simple because both the address and data are not required. The data is read out nondestructively and has the same polarity as the input data. Common input/output pins are provided.

The 2114 is designed for memory applications where high performance, low cost, large bit storage, and simple interfacing are important design objectives. The 2114 is placed in an 18-pin package for the highest density possible.

It is directly TTL compatible in all respects: inputs, outputs, and a single +5V supply. A separate Chip Select $\overline{CS}$ allows easy selection of an individual package when outputs are or-tied.

The 2114 is fabricated with Intel's N-channel Silicon-Gate technology — a technology that provides proven protection against contamination permitting the use of low cost plastic packaging.

PIN CONFIGURATION

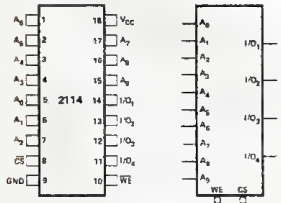

LOGIC SYMBOL

BLOCK DIAGRAM

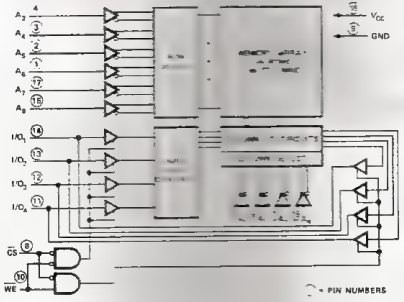

PIN NAMES

A_0–A_9	ADDRESS INPUTS	V_{CC}	POWER (+5V)
$\overline{WE}$	WRITE ENABLE	GND	GROUND
$\overline{CS}$	CHIP SELECT		
I/O_1–I/O_4	DATA INPUT/OUTPUT		

APPENDIX C
INSTRUCTION SET ALPHABETICAL ORDER

LOC	OBJ CODE	STMT	SOURCE STATEMENT
0000	8E	1	ADC A,(HL)
0001	DD8E05	2	ADC A,(IX+IND)
0004	FD8E05	3	ADC A,(IY+IND)
0007	8F	4	ADC A,A
0008	88	5	ADC A,B
0009	89	6	ADC A,C
000A	8A	7	ADC A,D
000B	8B	8	ADC A,E
000C	8C	9	ADC A,H
000D	8D	10	ADC A,L
000E	CE20	11	ADC A,N
0010	ED4A	12	ADC HL,BC
0012	ED5A	13	ADC HL,DE
0014	ED6A	14	ADC HL,HL
0016	ED7A	15	ADC HL,SP
0018	86	16	ADD A,(HL)
0019	DD8605	17	ADD A,(IX+IND)
001C	FD8605	18	ADD A,(IY+IND)
001F	87	19	ADD A,A
0020	80	20	ADD A,B
0021	81	21	ADD A,C
0022	82	22	ADD A,D
0023	83	23	ADD A,E
0024	84	24	ADD A,H
0025	85	25	ADD A,L
0026	C620	26	ADD A,N
0028	09	27	ADD HL,BC
0029	19	28	ADD HL,DE
002A	29	29	ADD HL,HL
002B	39	30	ADD HL,SP
002C	DD09	31	ADD IX,BC
002E	DD19	32	ADD IX,DE
0030	DD29	33	ADD IX,IX
0032	DD39	34	ADD IX,SP
0034	FD09	35	ADD IY,BC
0036	FD19	36	ADD IY,DE
0038	FD29	37	ADD IY,IY
003A	FD39	38	ADD IY,SP
003C	A6	39	AND (HL)
003D	DDA605	40	AND (IX+IND)
0040	FDA605	41	AND (IY+IND)
0043	A7	42	AND A
0044	A0	43	AND B
0045	A1	44	AND C
0046	A2	45	AND D
0047	A3	46	AND E
0048	A4	47	AND H
0049	A5	48	AND L
004A	E620	49	AND N
004C	CB46	50	BIT 0,(HL)
004E	DDCB0546	51	BIT 0,(IX+IND)
0052	FDCB0546	52	BIT 0,(IY+IND)
0056	CB47	53	BIT 0,A
0058	CB40	54	BIT 0,B
005A	CB41	55	BIT 0,C
005C	CB42	56	BIT 0,D
005E	CB43	57	BIT 0,E
0060	CB44	58	BIT 0,H
0062	CB45	59	BIT 0,L
0064	CB4E	60	BIT 1,(HL)
0066	DDCB054E	61	BIT 1,(IX+IND)
006A	FDCB054E	62	BIT 1,(IY+IND)
006E	CB4F	63	BIT 1,A
0070	CB48	64	BIT 1,B
0072	CB49	65	BIT 1,C
0074	CB4A	66	BIT 1,D
0076	CB4B	67	BIT 1,E
0078	CB4C	68	BIT 1,H
007A	CB4D	69	BIT 1,L
007C	CB56	70	BIT 2,(HL)
007E	DDCB0556	71	BIT 2,(IX+IND)
0082	FDCB0556	72	BIT 2,(IY+IND)
0086	CB57	73	BIT 2,A
0088	CB50	74	BIT 2,B
008A	CB51	75	BIT 2,C
008C	CB52	76	BIT 2,D
008E	CB53	77	BIT 2,E
0090	CB54	78	BIT 2,H
0092	CB55	79	BIT 2,L
0094	CB5E	80	BIT 3,(HL)
0096	DDCB055E	81	BIT 3,(IX+IND)
009A	FDCB055E	82	BIT 3,(IY+IND)
009E	CB5F	83	BIT 3,A
00A0	CB5B	84	BIT 3,B
00A2	CB59	85	BIT 3,C
00A4	CB5A	86	BIT 3,D
00A6	CB5B	87	BIT 3,E
00A8	CB5C	88	BIT 3,H
00AA	CB5D	89	BIT 3,L
00AC	CB66	90	BIT 4,(HL)
00AE	DDCB0566	91	BIT 4,(IX+IND)
00B2	FDCB0566	92	BIT 4,(IY+IND)
00B6	CB67	93	BIT 4,A
00B8	CB60	94	BIT 4,B
00BA	CB61	95	BIT 4,C
00BC	CB62	96	BIT 4,D
00BE	CB63	97	BIT 4,E
00C0	CB64	98	BIT 4,H
00C2	CB65	99	BIT 4,L
00C4	CB6E	100	BIT 5,(HL)
00C6	DDCB056E	101	BIT 5,(IX+IND)
00CA	FDCB056E	102	BIT 5,(IY+IND)
00CE	CB6F	103	BIT 5,A
00D0	CB68	104	BIT 5,B
00D2	CB69	105	BIT 5,C
00D4	CB6A	106	BIT 5,D
00D6	CB6B	107	BIT 5,E
00D8	CB6C	108	BIT 5,H
00DA	CB6D	109	BIT 5,L
00DC	CB76	110	BIT 6,(HL)
00DE	DDCB0576	111	BIT 6,(IX+IND)
00E2	FDCB0576	112	BIT 6,(IY+IND)
00E6	CB77	113	BIT 6,A
00E8	CB70	114	BIT 6,B
00EA	CB71	115	BIT 6,C
00EC	CB72	116	BIT 6,D
00EE	CB73	117	BIT 6,E
00F0	CB74	118	BIT 6,H
00F2	CB75	119	BIT 6,L
00F4	CB7E	120	BIT 7,(HL)
00F6	DDCB057E	121	BIT 7,(IX+IND)
00FA	FDCB057E	122	BIT 7,(IY+IND)
00FE	CB7F	123	BIT 7,A
0100	CB78	124	BIT 7,B
0102	CB79	125	BIT 7,C
0104	CB7A	126	BIT 7,D
0106	CB7B	127	BIT 7,E
0108	CB7C	128	BIT 7,H
010A	CB7D	129	BIT 7,L
010C	DC8405	130	CALL C,NN
010F	FC8405	131	CALL M,NN
0112	D48405	132	CALL NC,NN
0115	CD8405	133	CALL NN
0118	C48405	134	CALL NZ,NN
011B	F48405	135	CALL P,NN
011E	EC8405	136	CALL PE,NN
0121	E48405	137	CALL PO,NN
0124	CC8405	138	CALL Z,NN

LOC	OBJ CODE	STMT	SOURCE STATEMENT
0127	3F	139	CCF
0128	BE	140	CP (HL)
0129	DDBE05	141	CP (IX+IND)
012C	FDBE05	142	CP (IY+IND)
012F	BF	143	CP A
0130	B8	144	CP B
0131	B9	145	CP C
0132	BA	146	CP D
0133	BB	147	CP E
0134	BC	148	CP H
0135	BD	149	CP L
0136	FE20	150	CP N
0138	EDA9	151	CPD
013A	EDB9	152	CPDR
013C	EDA1	153	CPI
013E	EDB1	154	CPIR
0140	2F	155	CPL
0141	27	156	DAA
0142	35	157	DEC (HL)
0143	DD3505	158	DEC (IX+IND)
0146	FD3505	159	DEC (IY+IND)
0149	3D	160	DEC A
014A	05	161	DEC B
014B	0B	162	DEC BC
014C	0D	163	DEC C
014D	15	164	DEC D
014E	1B	165	DEC DE
014F	1D	166	DEC E
0150	25	167	DEC H
0151	28	168	DEC HL
0152	DD28	169	DEC IX
0154	FD28	170	DEC IY
0156	2D	171	DEC L
0157	3B	172	DEC SP
0158	F3	173	DI
0159	102E	174	DJNZ DIS
015B	FB	175	EI
015C	E3	176	EX (SP),HL
015D	DDE3	177	EX (SP),IX
015F	FDE3	178	EX (SP),IY
0161	08	179	EX AF,AF'
0162	EB	180	EX DE,HL
0163	D9	181	EXX
0164	76	182	HALT
0165	ED46	183	IM 0
0167	ED56	184	IM 1
0169	ED5E	185	IM 2
016B	ED78	186	IN A,(C)
016D	DB20	187	IN A,N
016F	ED40	188	IN B,(C)
0171	ED48	189	IN C,(C)
0173	ED50	190	IN D,(C)
0175	ED58	191	IN E,(C)
0177	ED60	192	IN H,(C)
0179	ED68	193	IN L,(C)
017B	34	194	INC (HL)
017C	DD3405	195	INC (IX+IND)
017F	FD3405	196	INC (IY+IND)
0182	3C	197	INC A
0183	04	198	INC B
0184	03	199	INC BC
0185	0C	200	INC C
0186	14	201	INC D
0187	13	202	INC DE
0188	1C	203	INC E
0189	24	204	INC H
018A	23	205	INC HL
018B	DD23	206	INC IX
018D	FD23	207	INC IY
018F	2C	208	INC L
0190	33	209	INC SP
0191	EDAA	210	IND
0193	EDBA	211	INDR
0195	EDA2	212	INI
0197	EDB2	213	INIR
0199	E9	214	JP (HL)
019A	DDE9	215	JP (IX)
019C	FDE9	216	JP (IY)
019E	DA8405	217	JP C,NN
01A1	FA8405	218	JP M,NN
01A4	D28405	219	JP NC,NN
01A7	C38405	220	JP NN
01AA	C28405	221	JP NZ,NN
01AD	F28405	222	JP P,NN
01B0	EA8405	223	JP PE,NN
01B3	E28405	224	JP PO,NN
01B6	CA8405	225	JP Z,NN
01B9	3826	226	JR C,DIS
01BB	1826	227	JR DIS
01BD	3026	228	JR NC,DIS
01BF	2026	229	JR NZ,DIS
01C1	2826	230	JR Z,DIS
01C3	02	231	LD (BC),A
01C4	12	232	LD (DE),A
01C5	77	233	LD (HL),A
01C6	70	234	LD (HL),B
01C7	71	235	LD (HL),C
01C8	72	236	LD (HL),D
01C9	73	237	LD (HL),E
01CA	74	238	LD (HL),H
01CB	75	239	LD (HL),L
01CC	3620	240	LD (HL),N
01CE	DD7705	241	LD (IX+IND),A
01D1	DD7005	242	LD (IX+IND),B
01D4	DD7105	243	LD (IX+IND),C
01D7	DD7205	244	LD (IX+IND),D
01DA	DD7305	245	LD (IX+IND),E
01DD	DD7405	246	LD (IX+IND),H
01E0	DD7505	247	LD (IX+IND),L
01E3	DD3605	248	LD (IX+IND),N
01E7	FD7705	249	LD (IY+IND),A
01EA	FD7005	250	LD (IY+IND),B
01ED	FD7105	251	LD (IY+IND),C
01F0	FD7205	252	LD (IY+IND),D
01F3	FD7305	253	LD (IY+IND),E
01F6	FD7405	254	LD (IY+IND),H
01F9	FD7505	255	LD (IY+IND),L
01FC	FD3605	256	LD (IY+IND),N
0200	32	257	LD (NN),A
0203	ED43	258	LD (NN),BC
0207	ED53	259	LD (NN),DE
020B	22	260	LD (NN),HL
020E	DD22	261	LD (NN),IX
0212	FD22	262	LD (NN),IY
0216	ED73	263	LD (NN),SP
021A	0A	264	LD A,(BC)
021B	1A	265	LD A,(DE)
021C	7E	266	LD A,(HL)
021D	DD7E05	267	LD A,(IX+IND)
0220	FD7E05	268	LD A,(IY+IND)
0223	3A	269	LD A,(NN)
0226	7F	270	LD A,A
0227	78	271	LD A,B
0228	79	272	LD A,C
0229	7A	273	LD A,D
022A	7B	274	LD A,E
022B	7C	275	LD A,H
022C	ED57	276	LD A,I

```
LOC     OBJ CODE    STMT SOURCE STATEMENT

022E    7D          277     LD    A,L
022F    3E20        278     LD    A,N
0231    46          279     LD    B,(HL)
0232    DD4605      280     LD    B,(IX+IND)
0235    FD4605      281     LD    B,(IY+IND)
0238    47          282     LD    B,A
0239    40          283     LD    B,B
023A    41          284     LD    B,C
023B    42          285     LD    B,D
023C    43          286     LD    B,E
023D    44          287     LD    B,H,NN
023E    45          288     LD    B,L
023F    0620        289     LD    B,N
0241    ED4B8405    290     LD    BC,(NN)
0245    018405      291     LD    BC,NN
0248    4E          292     LD    C,(HL)
0249    DD4E05      293     LD    C,(IX+IND)
024C    FD4E05      294     LD    C,(IY+IND)
024F    4F          295     LD    C,A
0250    48          296     LD    C,B
0251    49          297     LD    C,C
0252    4A          298     LD    C,D
0253    4B          299     LD    C,E
0254    4C          300     LD    C,H
0255    4D          301     LD    C,L
0256    0E20        302     LD    C,N
0258    56          303     LD    D,(HL)
0259    DD5605      304     LD    D,(IX+IND)
025C    FD5605      305     LD    D,(IY+IND)
025F    57          306     LD    D,A
0260    50          307     LD    D,B
0261    51          308     LD    D,C
0262    52          309     LD    D,D
0263    53          310     LD    D,E
0264    54          311     LD    D,H
0265    55          312     LD    D,L
0266    1620        313     LD    D,N
0268    ED588405    314     LD    DE,(NN)
026C    118405      315     LD    DE,NN
026F    5E          316     LD    E,(HL)
0270    DD5E05      317     LD    E,(IX+IND)
0273    FD5E05      318     LD    E,(IY+IND)
0276    5F          319     LD    E,A
0277    58          320     LD    E,B
0278    59          321     LD    E,C
0279    5A          322     LD    E,D
027A    5B          323     LD    E,E
027B    5C          324     LD    E,H
027C    5D          325     LD    E,L
027D    1E20        326     LD    E,N
027F    66          327     LD    H,(HL)
0280    DD6605      328     LD    H,(IX+IND)
0283    FD6605      329     LD    H,(IY+IND)
0286    67          330     LD    H,A
0287    60          331     LD    H,B
0288    61          332     LD    H,C
0289    62          333     LD    H,D
028A    63          334     LD    H,E
028B    64          335     LD    H,H
028C    65          336     LD    H,L
028D    2620        337     LD    H,N
028F    2A8405      338     LD    HL,(NN)
0292    218405      339     LD    HL,NN
0295    ED47        340     LD    I,A
0297    DD2A8405    341     LD    IX,(NN)
029B    DD218405    342     LD    IX,NN
029F    FD2A8405    343     LD    IY,(NN)
02A3    FD218405    344     LD    IY,NN
02A7    6E          345     LD    L,(HL)

LOC     OBJ CODE    STMT SOURCE STATEMENT

02A8    DD6E05      346     LD    L,(IX+IND)
02AB    FD6E05      347     LD    L,(IY+IND)
02AE    6F          348     LD    L,A
02AF    68          349     LD    L,B
02B0    69          350     LD    L,C
02B1    6A          351     LD    L,D
02B2    6B          352     LD    L,E
02B3    6C          353     LD    L,H
02B4    6D          354     LD    L,L
02B5    2E20        355     LD    L,N
02B7    ED788405    356     LD    SP,(NN)
02BB    F9          357     LD    SP,HL
02BC    DDF9        358     LD    SP,IX
02BE    FDF9        359     LD    SP,IY
02C0    318405      360     LD    SP,NN
02C3    EDA8        361     LDD
02C5    EDB8        362     LDDR
02C7    EDA0        363     LDI
02C9    EDB0        364     LDIR
02CB    ED44        365     NEG
02CD    00          366     NOP
02CE    B6          367     OR    (HL)
02CF    DDB605      368     OR    (IX+IND)
02D2    FDB605      369     OR    (IY+IND)
02D5    B7          370     OR    A
02D6    B0          371     OR    B
02D7    B1          372     OR    C
02D8    B2          373     OR    D
02D9    B3          374     OR    E
02DA    B4          375     OR    H
02DB    B5          376     OR    L
02DC    F620        377     OR    N
02DE    EDB8        378     OTDR
02E0    EDB3        379     OTIR
02E2    ED79        380     OUT   (C),A
02E4    ED41        381     OUT   (C),B
02E6    ED49        382     OUT   (C),C
02E8    ED51        383     OUT   (C),D
02EA    ED59        384     OUT   (C),E
02EC    ED61        385     OUT   (C),H
02EE    ED69        386     OUT   (C),L
02F0    D320        387     OUT   N,A
02F2    EDAB        388     OUTD
02F4    EDA3        389     OUTI
02F6    F1          390     POP   AF
02F7    C1          391     POP   BC
02F8    D1          392     POP   DE
02F9    E1          393     POP   HL
02FA    DDE1        394     POP   IX
02FC    FDE1        395     POP   IY
02FE    F5          396     PUSH  AF
02FF    C5          397     PUSH  BC
0300    D5          398     PUSH  DE
0301    E5          399     PUSH  HL
0302    DDE5        400     PUSH  IX
0304    FDE5        401     PUSH  IY
0306    CB86        402     RES   0,(HL)
0308    DDCB0586    403     RES   0,(IX+IND)
030C    FDCB0586    404     RES   0,(IY+IND)
0310    CB87        405     RES   0,A
0312    CB80        406     RES   0,B
0314    CB81        407     RES   0,C
0316    CB82        408     RES   0,D
0318    CB83        409     RES   0,E
031A    CB84        410     RES   0,H
031C    CB85        411     RES   0,L
031E    CB8E        412     RES   1,(HL)
0320    DDCB058E    413     RES   1,(IX+IND)
0324    FDCB058E    414     RES   1,(IY+IND)
```



```
LOC     OBJ CODE    STMT SOURCE STATEMENT

0328    CB8F        415     RES   1,A
032A    CB88        416     RES   1,B
032C    CB89        417     RES   1,C
032E    CB8A        418     RES   1,D
0330    CB8B        419     RES   1,E
0332    CB8C        420     RES   1,H
0334    CB8D        421     RES   1,L
0336    CB96        422     RES   2,(HL)
0338    DDCB0596    423     RES   2,(IX+IND)
033C    FDCB0596    424     RES   2,(IY+IND)
0340    CB97        425     RES   2,A
0342    CB90        426     RES   2,B
0344    CB91        427     RES   2,C
0346    CB92        428     RES   2,D
0348    CB93        429     RES   2,E
034A    CB94        430     RES   2,H
034C    CB95        431     RES   2,L
034E    CB9E        432     RES   3,(HL)
0350    DDCB059E    433     RES   3,(IX+IND)
0354    FDCB059E    434     RES   3,(IY+IND)
0358    CB9F        435     RES   3,A
035A    CB98        436     RES   3,B
035C    CB99        437     RES   3,C
035E    CB9A        438     RES   3,D
0360    CB98        439     RES   3,E
0362    CB9C        440     RES   3,H
0364    CB9D        441     RES   3,L
0366    CBA6        442     RES   4,(HL)
0368    DDCB05A6    443     RES   4,(IX+IND)
036C    FDCB05A6    444     RES   4,(IY+IND)
0370    CBA7        445     RES   4,A
0372    CBA0        446     RES   4,B
0374    CBA1        447     RES   4,C
0376    CBA2        448     RES   4,D
0378    CBA3        449     RES   4,E
037A    CBA4        450     RES   4,H
037C    CBA5        451     RES   4,L
037E    CBAE        452     RES   5,(HL)
0380    DDCB05AE    453     RES   5,(IX+IND)
0384    FDCB05AE    454     RES   5,(IY+IND)
0388    CBAF        455     RES   5,A
038A    CBA8        456     RES   5,B
038C    CBA9        457     RES   5,C
038E    CBAA        458     RES   5,D
0390    CBAB        459     RES   5,E
0392    CBAC        460     RES   5,H
0394    CBAD        461     RES   5,L
0396    CBB6        462     RES   6,(HL)
0398    DDCB05B6    463     RES   6,(IX+IND)
039C    FDCB05B6    464     RES   6,(IY+IND)
03A0    CBB7        465     RES   6,A
03A2    CBB0        466     RES   6,B
03A4    CBB1        467     RES   6,C
03A6    CBB2        468     RES   6,D
03A8    CBB3        469     RES   6,E
03AA    CBB4        470     RES   6,H
03AC    CBB5        471     RES   6,L
03AE    CBBE        472     RES   7,(HL)
03B0    DDCB05BE    473     RES   7,(IX+IND)
03B4    FDCB05BE    474     RES   7,(IY+IND)
03B8    CBBF        475     RES   7,A
03BA    CBB8        476     RES   7,B
03BC    CBB9        477     RES   7,C
03BE    CBBA        478     RES   7,D
03C0    CBBB        479     RES   7,E
03C2    CBBC        480     RES   7,H
03C4    CBBD        481     RES   7,L
03C6    C9          482     RET
03C7    D8          483     RET   C

LOC     OBJ CODE    STMT SOURCE STATEMENT

03C8    F8          484     RET   M
03C9    D0          485     RET   NC
03CA    C0          486     RET   NZ
03CB    F0          487     RET   P
03CC    E8          488     RET   PE
03CD    E0          489     RET   PO
03CE    C8          490     RET   Z
03CF    ED4D        491     RETI
03D1    ED45        492     RETN
03D3    CB16        493     RL    (HL)
03D5    DDCB0516    494     RL    (IX+IND)
03D9    FDCB0516    495     RL    (IY+IND)
03DD    CB17        496     RL    A
03DF    CB10        497     RL    B
03E1    CB11        498     RL    C
03E3    CB12        499     RL    D
03E5    CB13        500     RL    E
03E7    CB14        501     RL    H
03E9    CB15        502     RL    L
03EB    17          503     RLA
03EC    CB06        504     RLC   (HL)
03EE    DDCB0506    505     RLC   (IX+IND)
03F2    FDCB0506    506     RLC   (IY+IND)
03F6    CB07        507     RLC   A
03F8    CB00        508     RLC   B
03FA    CB01        509     RLC   C
03FC    CB02        510     RLC   D
03FE    CB03        511     RLC   E
0400    CB04        512     RLC   H
0402    CB05        513     RLC   L
0404    07          514     RLCA
0405    ED6F        515     RLD
0407    CB1E        516     RR    (HL)
0409    DDCB051E    517     RR    (IX+IND)
040D    FDCB051E    518     RR    (IY+IND)
0411    CB1F        519     RR    A
0413    CB18        520     RR    B
0415    CB19        521     RR    C
0417    CB1A        522     RR    D
0419    CB1B        523     RR    E
041B    CB1C        524     RR    H
041D    CB1D        525     RR    L
041F    1F          526     RRA
0420    CB0E        527     RRC   (HL)
0422    DDCB050E    528     RRC   (IX+IND)
0426    FDCB050E    529     RRC   (IY+IND)
042A    CB0F        530     RRC   A
042C    CB08        531     RRC   B
042E    CB09        532     RRC   C
0430    CB0A        533     RRC   D
0432    CB0B        534     RRC   E
0434    CB0C        535     RRC   H
0436    CB0D        536     RRC   L
0438    0F          537     RRCA
0439    ED67        538     RRD
043B    C7          539     RST   0
043C    D7          540     RST   10H
043D    DF          541     RST   18H
043E    E7          542     RST   20H
043F    EF          543     RST   28H
0440    F7          544     RST   30H
0441    FF          545     RST   38H
0442    CF          546     RST   8
0443    9E          547     SBC   A,(HL)
0444    DD9E05      548     SBC   A,(IX+IND)
0447    FD9E05      549     SBC   A,(IY+IND)
044A    9F          550     SBC   A,A
044B    98          551     SBC   A,B
044C    99          552     SBC   A,C
```

```
LOC     OBJ CODE    STMT SOURCE STATEMENT

044D    9A          553         SBC   A,D
044E    98          554         SBC   A,E
044F    9C          555         SBC   A,H
0450    9D          556         SBC   A,L
0451    DE20        557         SBC   A,N
0453    ED42        558         SBC   HL,BC
0455    ED52        559         SBC   HL,DE
0457    ED62        560         SBC   HL,HL
0459    ED72        561         SBC   HL,SP
045B    37          562         SCF
045C    CBC6        563         SET   0,(HL)
045E    DDCB05C6    564         SET   0,(IX+IND)
0462    FDCB05C6    565         SET   0,(IY+IND)
0466    CBC7        566         SET   0,A
0468    CBC0        567         SET   0,B
046A    CBC1        568         SET   0,C
046C    CBC2        569         SET   0,D
046E    CBC3        570         SET   0,E
0470    CBC4        571         SET   0,H
0472    CBC5        572         SET   0,L
0474    CBCE        573         SET   1,(HL)
0476    DDCB05CE    574         SET   1,(IX+IND)
047A    FDCB05CE    575         SET   1,(IY+IND)
047E    CBCF        576         SET   1,A
0480    CBC8        577         SET   1,B
0482    CBC9        578         SET   1,C
0484    CBCA        579         SET   1,D
0486    CBCB        580         SET   1,E
0488    CBCC        581         SET   1,H
048A    CBCD        582         SET   1,L
048C    CBD6        583         SET   2,(HL)
048E    DDCB05D6    584         SET   2,(IX+IND)
0492    FDCB05D6    585         SET   2,(IY+IND)
0496    CBD7        586         SET   2,A
0498    CBD0        587         SET   2,B
049A    CBD1        588         SET   2,C
049C    CBD2        589         SET   2,D
049E    CBD3        590         SET   2,E
04A0    CBD4        591         SET   2,H
04A2    CBD5        592         SET   2,L
04A4    CBD8        593         SET   3,B
04A6    CBDE        594         SET   3,(HL)
04A8    DDCB05DE    595         SET   3,(IX+IND)
04AC    FDCB05DE    596         SET   3,(IY+IND)
04B0    CBDF        597         SET   3,A
04B2    CBD9        598         SET   3,C
04B4    CBDA        599         SET   3,D
04B6    CBDB        600         SET   3,E
04B8    CBDC        601         SET   3,H
04BA    CBDD        602         SET   3,L
04BC    CBE6        603         SET   4,(HL)
04BE    DDCB05E6    604         SET   4,(IX+IND)
04C2    FDCB05E6    605         SET   4,(IY+IND)
04C6    CBE7        606         SET   4,A
04C8    CBE0        607         SET   4,B
04CA    CBE1        608         SET   4,C
04CC    CBE2        609         SET   4,D
04CE    CBE3        610         SET   4,E
04D0    CBE4        611         SET   4,H
04D2    CBE5        612         SET   4,L
04D4    CBEE        613         SET   5,(HL)
04D8    DDCB05EE    614         SET   5,(IX+IND)
04DA    FDCB05EE    615         SET   5,(IY+IND)
04DE    CBEF        616         SET   5,A
04E0    CBE8        617         SET   5,B
04E2    CBE9        618         SET   5,C
04E4    CBEA        619         SET   5,D
04E6    CBEB        620         SET   5,E
04E8    CBEC        621         SET   5,H

LOC     OBJ CODE    STMT SOURCE STATEMENT

04EA    CBED        622         SET   5,L
04EC    CBF6        623         SET   6,(HL)
04EE    DDCB05F6    624         SET   6,(IX+IND)
04F2    FDCB05F6    625         SET   6,(IY+IND)
04F6    CBF7        626         SET   6,A
04F8    CBF0        627         SET   6,B
04FA    CBF1        628         SET   6,C
04FC    CBF2        629         SET   6,D
04FE    CBF3        630         SET   6,E
0500    CBF4        631         SET   6,H
0502    CBF5        632         SET   6,L
0504    CBFE        633         SET   7,(HL)
0506    DDCB05FE    634         SET   7,(IX+IND)
050A    FDCB05FE    635         SET   7,(IY+IND)
050E    CBFF        636         SET   7,A
0510    CBF8        637         SET   7,B
0512    CBF9        638         SET   7,C
0514    CBFA        639         SET   7,D
0516    CBFB        640         SET   7,E
0518    CBFC        641         SET   7,H
051A    CBFD        642         SET   7,L
051C    CB26        643         SLA   (HL)
051E    DDCB0526    644         SLA   (IX+IND)
0522    FDCB0526    645         SLA   (IY+IND)
0526    CB27        646         SLA   A
0528    CB20        647         SLA   B
052A    CB21        648         SLA   C
052C    CB22        649         SLA   D
052E    CB23        650         SLA   E
0530    CB24        651         SLA   H
0532    CB25        652         SLA   L
0534    CB2E        653         SRA   (HL)
0536    DDCB052E    654         SRA   (IX+IND)
053A    FDCB052E    655         SRA   (IY+IND)
053E    CB2F        656         SRA   A
0540    CB28        657         SRA   B
0542    CB29        658         SRA   C
0544    CB2A        659         SRA   D
0546    CB2B        660         SRA   E
0548    CB2C        661         SRA   H
054A    CB2D        662         SRA   L
054C    CB3E        663         SRL   (HL)
054E    DDCB053E    664         SRL   (IX+IND)
0552    FDCB053E    665         SRL   (IY+IND)
0556    CB3F        666         SRL   A
0558    CB38        667         SRL   B
055A    CB39        668         SRL   C
055C    CB3A        669         SRL   D
055E    CB3B        670         SRL   E
0560    CB3C        671         SRL   H
0562    CB3D        672         SRL   L
0564    96          673         SUB   (HL)
0565    DD9605      674         SUB   (IX+IND)
0568    FD9605      675         SUB   (IY+IND)
056B    97          676         SUB   A
056C    90          677         SUB   B
056D    91          678         SUB   C
056E    92          679         SUB   D
056F    93          680         SUB   E
0570    94          681         SUB   H
0571    95          682         SUB   L
0572    D620        683         SUB   N
0574    AE          684         XOR   (HL)
0575    DDAE05      685         XOR   (IX+IND)
0578    FDAE05      686         XOR   (IY+IND)
057B    AF          687         XOR   A
057C    A8          688         XOR   B
057D    A9          689         XOR   C
057E    AA          690         XOR   D
```



```
LOC     OBJ CODE    STMT SOURCE STATEMENT

057F    AB          691         XOR   E
0580    AC          692         XOR   H
0581    AD          693         XOR   L
0582    EE20        694         XOR   N
0584                695 NN      DEFS  2
                    696 IND     EQU   5
                    697 N       EQU   10H
                    698 N       EQU   20H
                    699 DIS     EQU   30H
                    700         END
```

APPENDIX D
INSTRUCTION SET NUMERICAL ORDER

LOC	OBJ CODE	STMT	SOURCE STATEMENT
0000	00	1	NOP
0001	018405	2	LD BC,NN
0004	02	3	LD (BC),A
0005	03	4	INC BC
0006	04	5	INC B
0007	05	6	DEC B
0008	0620	7	LD B,N
000A	07	8	RLCA
000B	08	9	EX AF,AF'
000C	09	10	ADD HL,BC
000D	0A	11	LD A,(BC)
000E	0B	12	DEC BC
000F	0C	13	INC C
0010	0D	14	DEC C
0011	0E20	15	LD C,N
0013	0F	16	RRCA
0014	102E	17	DJNZ DIS
0016	118405	18	LD DE,NN
0019	12	19	LD (DE),A
001A	13	20	INC DE
0018	14	21	INC D
001C	15	22	DEC D
0010	1620	23	LD D,N
001F	17	24	RLA
0020	182E	25	JR DIS
0022	19	26	ADD HL,DE
0023	1A	27	LD A,(DE)
0024	1B	28	DEC DE
0025	1C	29	INC E
0026	1D	30	DEC E
0027	1E20	31	LD E,N
0029	1F	32	RRA
002A	202E	33	JR NZ,DIS
002C	218405	34	LD HL,NN
002F	228405	35	LD (NN),HL
0032	23	36	INC HL
0033	24	37	INC H
0034	25	38	DEC H
0035	2620	39	LD H,N
0037	27	40	DAA
0038	282E	41	JR Z,DIS
003A	29	42	ADD HL,HL
003B	2A8405	43	LD HL,(NN)
003E	2B	44	DEC HL
003F	2C	45	INC L
0040	2D	46	DEC L
0041	2E20	47	LD L,N
0043	2F	48	CPL
0044	302E	49	JR NC,DIS
0046	318405	50	LD SP,NN
0049	328405	51	LD (NN),A
004C	33	52	INC SP
004D	34	53	INC (HL)
004E	35	54	DEC (HL)
004F	3620	55	LD (HL),N
0051	37	56	SCF
0052	382E	57	JR C,DIS
0054	39	58	ADD HL,SP
0055	3A8405	59	LD A,(NN)
0058	3B	60	DEC SP
0059	3C	61	INC A
005A	3D	62	DEC A
005B	3E20	63	LD A,N
005D	3F	64	CCF
005E	40	65	LD B,B
005F	41	66	LD B,C
0060	42	67	LD B,D
0061	43	68	LD B,E
0062	44	69	LD B,H,NN
0063	45	70	LD B,L
0064	46	71	LD B,(HL)
0065	47	72	LD B,A
0066	48	73	LD C,B
0067	49	74	LD C,C
0068	4A	75	LD C,D
0069	4B	76	LD C,E
006A	4C	77	LD C,H
0068	4D	78	LD C,L
006C	4E	79	LD C,(HL)
006D	4F	80	LD C,A
006E	50	81	LD D,B
006F	51	82	LD D,C
0070	52	83	LD D,D
0071	53	84	LD D,E
0072	54	85	LD D,H
0073	55	86	LD D,L
0074	56	87	LD D,(HL)
0075	57	88	LD D,A
0076	58	89	LD E,B
0077	59	90	LD E,C
0078	5A	91	LD E,D
0079	5B	92	LD E,E
007A	5C	93	LD E,H
007B	5D	94	LD E,L
007C	5E	95	LD E,(HL)
007D	5F	96	LD E,A
007E	60	97	LD H,B
007F	61	98	LD H,C
0080	62	99	LD H,D
0081	63	100	LD H,E
0082	64	101	LD H,H
0083	65	102	LD H,L
0084	66	103	LD H,(HL)
0085	67	104	LD H,A
0086	68	105	LD L,B
0087	69	106	LD L,C
0088	6A	107	LD L,D
0089	6B	108	LD L,E
008A	6C	109	LD L,H
008B	6D	110	LD L,L
008C	6E	111	LD L,(HL)
008D	6F	112	LD L,A
008E	70	113	LD (HL),B
008F	71	114	LD (HL),C
0090	72	115	LD (HL),D
0091	73	116	LD (HL),E
0092	74	117	LD (HL),H
0093	75	118	LD (HL),L
0094	76	119	HALT
0095	77	120	LD (HL),A
0096	78	121	LD A,B
0097	79	122	LD A,C
0098	7A	123	LD A,D
0099	7B	124	LD A,E
009A	7C	125	LD A,H
0098	7D	126	LD A,L
009C	7E	127	LD A,(HL)
009D	7F	128	LD A,A
009E	80	129	ADD A,B
009F	81	130	ADD A,C
00A0	82	131	ADD A,D
00A1	83	132	ADD A,E
00A2	84	133	ADD A,H
00A3	85	134	ADD A,L
00A4	86	135	ADD A,(HL)
00A5	87	136	ADD A,A
00A6	88	137	ADC A,B
00A7	89	138	ADC A,C

LOC	OBJ CODE	STMT	SOURCE STATEMENT
028C	CBAA	415	RES 5,D
028E	CBAB	416	RES 5,E
0290	CBAC	417	RES 5,H
0292	CBAD	418	RES 5,L
0294	CBAE	419	RES 5,(HL)
0296	CBAF	420	RES 5,A
0298	CBB0	421	RES 6,B
029A	CBB1	422	RES 6,C
029C	CBB2	423	RES 6,D
029E	CBB3	424	RES 6,E
02A0	CBB4	425	RES 6,H
02A2	CBB5	426	RES 6,L
02A4	CBB6	427	RES 6,(HL)
02A6	CBB7	428	RES 6,A
02A8	CBB8	429	RES 7,B
02AA	CBB9	430	RES 7,C
02AC	CBBA	431	RES 7,D
02AE	CBBB	432	RES 7,E
02B0	CBBC	433	RES 7,H
02B2	CBBD	434	RES 7,L
02B4	CBBE	435	RES 7,(HL)
02B6	CBBF	436	RES 7,A
02B8	CBC0	437	SET 0,B
02BA	CBC1	438	SET 0,C
02BC	CBC2	439	SET 0,D
02BE	CBC3	440	SET 0,E
02C0	CBC4	441	SET 0,H
02C2	CBC5	442	SET 0,L
02C4	CBC6	443	SET 0,(HL)
02C6	CBC7	444	SET 0,A
02C8	CBC8	445	SET 1,B
02CA	CBC9	446	SET 1,C
02CC	CBCA	447	SET 1,D
02CE	CBCB	448	SET 1,E
02D0	CBCC	449	SET 1,H
02D2	CBCD	450	SET 1,L
02D4	CBCE	451	SET 1,(HL)
02D6	CBCF	452	SET 1,A
02D8	CBD0	453	SET 2,B
02DA	CBD1	454	SET 2,C
02DC	CBD2	455	SET 2,D
02DE	CBD3	456	SET 2,E
02E0	CBD4	457	SET 2,H
02E2	CBD5	458	SET 2,L
02E4	CBD6	459	SET 2,(HL)
02E6	CBD7	460	SET 2,A
02E8	CBD8	461	SET 3 B
02EA	CBD9	462	SET 3,C
02EC	CBDA	463	SET 3,D
02EE	CBDB	464	SET 3,E
02F0	CBDC	465	SET 3,H
02F2	CBDD	466	SET 3,L
02F4	CBDE	467	SET 3,(HL)
02F6	CBDF	468	SET 3,A
02F8	CBE0	469	SET 4,B
02FA	CBE1	470	SET 4,C
02FC	CBE2	471	SET 4,D
02FE	CBE3	472	SET 4,E
0300	CBE4	473	SET 4,H
0302	CBE5	474	SET 4,L
0304	CBE6	475	SET 4,(HL)
0306	CBE7	476	SET 4,A
0308	CBE8	477	SET 5,B
030A	CBE9	478	SET 5,C
030C	CBEA	479	SET 5,D
030E	CBEB	480	SET 5,E
0310	CBEC	481	SET 5,H
0312	CBED	482	SET 5,L
0314	CBEE	483	SET 5,(HL)

LOC	OBJ CODE	STMT	SOURCE STATEMENT
0316	CBEF	484	SET 5,A
0318	CBF0	485	SET 6,B
031A	CBF1	486	SET 6,C
031C	CBF2	487	SET 6,D
031E	CBF3	488	SET 6,E
0320	CBF4	489	SET 6,H
0322	CBF5	490	SET 6,L
0324	CBF6	491	SET 6,(HL)
0326	CBF7	492	SET 6,A
0328	CBF8	493	SET 7,B
032A	CBF9	494	SET 7,C
032C	CBFA	495	SET 7,D
032E	CBFB	496	SET 7,E
0330	CBFC	497	SET 7,H
0332	CBFD	498	SET 7,L
0334	CBFE	499	SET 7,(HL)
0336	CBFF	500	SET 7,A
0338	0029	501	ADD IX,BC
033A	0019	502	ADD IX,DE
033C	00218405	503	LD IX,NN
0340	00228405	504	LD (NN),IX
0344	0023	505	INC IX
0346	0029	506	ADD IX,IX
0348	002A8405	507	LD IX,(NN)
034C	002B	508	DEC IX
034E	0034 25	509	INC (IX+IND)
0351	0035 25	510	DEC (IX+IND)
0354	00362520	511	LD (IX+IND),N
0358	0039	512	ADD IX,SP
035A	0046 25	513	LD B,(IX+IND)
035D	004E 25	514	LD C,(IX+IND)
0360	0056 25	515	LD D,(IX+IND)
0363	005E 25	516	LD E,(IX+IND)
0366	0066 25	517	LD H,(IX+IND)
0369	006E 25	518	LD L,(IX+IND)
036C	0070 25	519	LD (IX+IND),B
036F	0071 25	520	LD (IX+IND),C
0372	0072 25	521	LD (IX+IND),D
0375	0073 25	522	LD (IX+IND),E
0378	0074 25	523	LD (IX+IND),H
037B	0075 25	524	LD (IX+IND),L
037E	0077 25	525	LD (IX+IND),A
0381	0086 25	526	LD A,(IX+IND)
0384	008E 25	527	ADD A,(IX+IND)
0387	0096 25	528	ADC A,(IX+IND)
038A	009E 25	529	SUB (IX+IND)
038D	00A6 25	530	SBC A,(IX+IND)
0390	00AE 25	531	AND (IX+IND)
0393	00B6 25	532	XOR (IX+IND)
0396	00BE 25	533	OR (IX+IND)
0399	00BE 25	534	CP (IX+IND)
039C	00E1	535	POP IX
039E	00E3	536	EX (SP),IX
03A0	00E5	537	PUSH IX
03A2	00E9	538	JP (IX)
03A4	00F9	539	LD SP,IX
03A6	00CB3506	540	RLC (IX+IND)
03AA	00CB350E	541	RRC (IX+IND)
03AE	00CB3516	542	RL (IX+IND)
03B2	00CB351E	543	RR (IX+IND)
03B6	00CB3526	544	SLA (IX+IND)
03BA	00CB352E	545	SRA (IX+IND)
03BE	00CB353E	546	SRL (IX+IND)
03C2	00CB3546	547	BIT 0,(IX+IND)
03C6	00CB354E	548	BIT 1,(IX+IND)
03CA	00CB3556	549	BIT 2,(IX+IND)
03CE	00CB355E	550	BIT 3,(IX+IND)
03D2	00CB3566	551	BIT 4,(IX+IND)
03D6	00CB356E	552	BIT 5,(IX+IND)

```
LOC     OBJ CODE      STMT SOURCE STATEMENT
03DA    DDCB0576      553      BIT 6,(IX+IND)
03DE    DDCB057E      554      BIT 7,(IX+IND)
03E2    DDCB0586      555      RES 0,(IX+IND)
03E6    DDCB058E      556      RES 1,(IX+IND)
03EA    DDCB0596      557      RES 2,(IX+IND)
03EE    DDCB059E      558      RES 3,(IX+IND)
03F2    DDCB05A6      559      RES 4,(IX+IND)
03F6    DDCB05AE      560      RES 5,(IX+IND)
03FA    DDCB05B6      561      RES 6,(IX+IND)
03FE    DDCB05BE      562      RES 7,(IX+IND)
0402    DDCB05C6      563      SET 0,(IX+IND)
0406    DDCB05CE      564      SET 1,(IX+IND)
040A    DDCB05D6      565      SET 2,(IX+IND)
040E    DDCB05DE      566      SET 3,(IX+IND)
0412    DDCB05E6      567      SET 4,(IX+IND)
0416    DDCB05EE      568      SET 5,(IX+IND)
041A    DDCB05F6      569      SET 6,(IX+IND)
041E    DDCB05FE      570      SET 7,(IX+IND)
0422    ED40          571      IN B,(C)
0424    ED41          572      OUT (C),B
0426    ED42          573      SBC HL,BC
0428    ED438405      574      LD (NN),BC
042C    ED44          575      NEG
042E    ED45          576      RETN
0430    ED46          577      IM 0
0432    ED47          578      LD I,A
0434    ED48          579      IN C,(C)
0436    ED49          580      OUT (C),C
0438    ED4A          581      ADC HL,BC
043A    ED4B8405      582      LD BC,(NN)
043E    ED4D          583      RETI
0440    ED50          584      IN D,(C)
0442    ED51          585      OUT (C),D
0444    ED52          586      SBC HL,DE
0446    ED538405      587      LD (NN),DE
044A    ED56          588      IM 1
044C    ED57          589      LD A,I
044E    ED58          590      IN E,(C)
0450    ED59          591      OUT (C),E
0452    ED5A          592      ADC HL,DE
0454    ED5B8405      593      LD DE,(NN)
0458    ED5E          594      IM 2
045A    ED60          595      IN H,(C)
045C    ED61          596      OUT (C),H
045E    ED62          597      SBC HL,HL
0460    ED67          598      RRD
0462    ED68          599      IN L,(C)
0464    ED69          600      OUT (C),L
0466    ED6A          601      ADC HL,HL
0468    ED6F          602      RLD
046A    ED72          603      SBC HL,SP
046C    ED738405      604      LD (NN),SP
0470    ED78          605      IN A,(C)
0472    ED79          606      OUT (C),A
0474    ED7A          607      ADC HL,SP
0476    ED7B8405      608      LD SP,(NN)
047A    EDA0          609      LDI
047C    EDA1          610      CPI
047E    EDA2          611      INI
0480    EDA3          612      OUTI
0482    EDA8          613      LDD
0484    EDA9          614      CPD
0486    EDAA          615      IND
0488    EDAB          616      OUTD
048A    EDB0          617      LDIR
048C    EDB1          618      CPIR
048E    EDB2          619      INIR
0490    EDB3          620      OTIR
0492    EDB8          621      LDDR

LOC     OBJ CODE      STMT SOURCE STATEMENT
0494    EDB9          622      CPDR
0496    EDBA          623      INDR
0498    EDBB          624      OTDR
049A    FD09          625      ADD IY,BC
049C    FD19          626      ADD IY,DE
049E    FD218405      627      LD IY,NN
04A2    FD228405      628      LD (NN),IY
04A6    FD23          629      INC IY
04A8    FD29          630      ADD IY,IY
04AA    FD2A8405      631      LD IY,(NN)
04AE    FD2B          632      DEC IY
04B0    FD3405        633      INC (IY+IND)
04B3    FD3505        634      DEC (IY+IND)
04B6    FD360520      635      LD (IY+IND),N
04BA    FD39          636      ADD IY,SP
04BC    FD4605        637      LD B,(IY+IND)
04BF    FD4E05        638      LD C,(IY+IND)
04C2    FD5605        639      LD D,(IY+IND)
04C5    FD5E05        640      LD E,(IY+IND)
04C8    FD6605        641      LD H,(IY+IND)
04CB    FD6E05        642      LD L,(IY+IND)
04CE    FD7005        643      LD (IY+IND),B
04D1    FD7105        644      LD (IY+IND),C
04D4    FD7205        645      LD (IY+IND),D
04D7    FD7305        646      LD (IY+IND),E
04DA    FD7405        647      LD (IY+IND),H
04DD    FD7505        648      LD (IY+IND),L
04E0    FD7705        649      LD (IY+IND),A
04E3    FD7E05        650      LD A,(IY+IND)
04E6    FD8605        651      ADD A,(IY+IND)
04E9    FD8E05        652      ADC A,(IY+IND)
04EC    FD9605        653      SUB (IY+IND)
04EF    FD9E05        654      SBC A,(IY+IND)
04F2    FDA605        655      AND (IY+IND)
04F5    FDAE05        656      XOR (IY+IND)
04F8    FDB605        657      OR (IY+IND)
04FB    FDBE05        658      CP (IY+IND)
04FE    FDE1          659      POP IY
0500    FDE3          660      EX (SP),IY
0502    FDE5          661      PUSH IY
0504    FDE9          662      JP (IY)
0506    FDF9          663      LD SP,IY
0508    FDCB0506      664      RLC (IY+IND)
050C    FDCB050E      665      RRC (IY+IND)
0510    FDCB0516      666      RL (IY+IND)
0514    FDCB051E      667      RR (IY+IND)
0518    FDCB0526      668      SLA (IY+IND)
051C    FDCB052E      669      SRA (IY+IND)
0520    FDCB053E      670      SRL (IY+IND)
0524    FDCB0546      671      BIT 0,(IY+IND)
0528    FDCB054E      672      BIT 1,(IY+IND)
052C    FDCB0556      673      BIT 2,(IY+IND)
0530    FDCB055E      674      BIT 3,(IY+IND)
0534    FDCB0566      675      BIT 4,(IY+IND)
0538    FDCB056E      676      BIT 5,(IY+IND)
053C    FDCB0576      677      BIT 6,(IY+IND)
0540    FDCB057E      678      BIT 7,(IY+IND)
0544    FDCB0586      679      RES 0,(IY+IND)
0548    FDCB058E      680      RES 1,(IY+IND)
054C    FDCB0596      681      RES 2,(IY+IND)
0550    FDCB059E      682      RES 3,(IY+IND)
0554    FDCB05A6      683      RES 4,(IY+IND)
0558    FDCB05AE      684      RES 5,(IY+IND)
055C    FDCB0586      685      RES 6,(IY+IND)
0560    FDCB058E      686      RES 7,(IY+IND)
0564    FDCB05C6      687      SET 0,(IY+IND)
0568    FDCB05CE      688      SET 1,(IY+IND)
056C    FDCB05D6      689      SET 2,(IY+IND)
0570    FDCB05DE      690      SET 3,(IY+IND)
```



```
LOC     OBJ CODE      STMT SOURCE STATEMENT
0574    FDCB05E6      691      SET 4,(IY+IND)
0578    FDCB05EE      692      SET 5,(IY+IND)
057C    FDCB05F6      693      SET 6,(IY+IND)
0580    FDCB05FE      694      SET 7,(IY+IND)
0584                  695 NN   DEFS 2
                      696 IND  EQU  5
                      697 M    EQU  10H
                      698 N    EQU  20H
                      699 DIS  EQU  30H
                      700      END
```

ELEMENT TABLE

ITEM	DESCRIPTION	QUANTITY
$R_1 \sim R_{15}$	RESISTOR 10KΩ ⅛W ± 5%	15
R_{16}	〃 3.3KΩ 〃	1
R_{17}	〃 220Ω 〃	1
R_{18}	〃 3.3KΩ 〃	1
R_{19}	〃 220Ω 〃	1
R_{20}	〃 3.3KΩ 〃	1
R_{21}	〃 220Ω 〃	1
R_{22}	〃 3.3KΩ 〃	1
R_{23}	〃 220Ω 〃	1
R_{24}	〃 3.3KΩ 〃	1
R_{25}	〃 220Ω 〃	1
R_{26}	〃 3.3KΩ 〃	1
R_{27}	〃 220Ω 〃	1
R_{28}	〃 3.3KΩ 〃	1
R_{29}	〃 220Ω 〃	1
R_{30}	〃 3.3KΩ 〃	1
R_{31}	〃 220Ω 〃	1
R_{32}	〃 330Ω 〃	1
$R_{33} \sim R_{36}$	〃 10KΩ 〃	4
R_{37}	〃 33Ω ¼W ± 5%	1
R_{38}	〃 10KΩ ⅛W ± 5%	1
R_{39}	〃 330Ω 〃	1
R_{40}	〃 10KΩ 〃	1
$R_{41} \sim R_{42}$	〃 330Ω 〃	2
R_{43}	〃 300Ω 〃	1
R_{44}	〃 10KΩ 〃	1
VR_1	VARIABLY RESISTOR 2KΩ	1
C_1	CAPACITOR 0.02μF	1
C_2	〃 47μF/50V	1
C_3	〃 0.02μF	1

ITEM	DESCRIPTION	QUANTITY
$C_4 \sim C_6$	CAPACITOR 0.02μF	3
$C_7 \sim C_8$	〃 0.01μF	2
$C_9 \sim C_{10}$	〃 0.02μF	2
C_{11}	〃 0.01μF	1
C_{12}	〃 500P	1
C_{13}	〃 10μF/16V	1
$D_1 \sim D_6$	LC31 RED COLOR 0.3"7—SEGMENT	6
D_7	LT311 3∅ RED COLOR	1
D_8	SWITCH DIODE IN914	1
D_9	〃 IN4001	1
D_{10}	LT311 3∅ RED COLOR	1
$D_{11} \sim D_{13}$	SWITCH DIODE IN914	3
Z_1	CPU Z80	1
Z_2	EPROM 2716 2K × 8BIT	1
$Z_3 \sim Z_4$	RAM 2114 × 1K 4BIT	2
Z_5	PIO 8255	1
Z_6	SN74LS139	1
Z_7	SN74LS14	1
	IC SOCKET 40PIN DIP	2
	〃 24PIN DIP	1
	〃 18PIN DIP	2
$TR_1 \sim TR_{16}$	2SA950	16
	RUBBER FOOT	7
	EARPHONE	2
	DC SET	1
	KET BOARD	2
	PLATE 110mm × 25mm	1

ITEM	DESCRIPTION	QUANTITY
	SCREW 3φ	8
	WASHER	7
	HEAT SINKER	1
	LM340	1
	SW	1
	IEVEL	1
	P.C BOARD	1
	SP	1
	FILE	1

F001 — Play music.
F002. — HELP US flashing.
F003. — CLOCK.
F004 — TELEPHONE ringing.
F005 — Wheel of fortune
F006 — Organ.

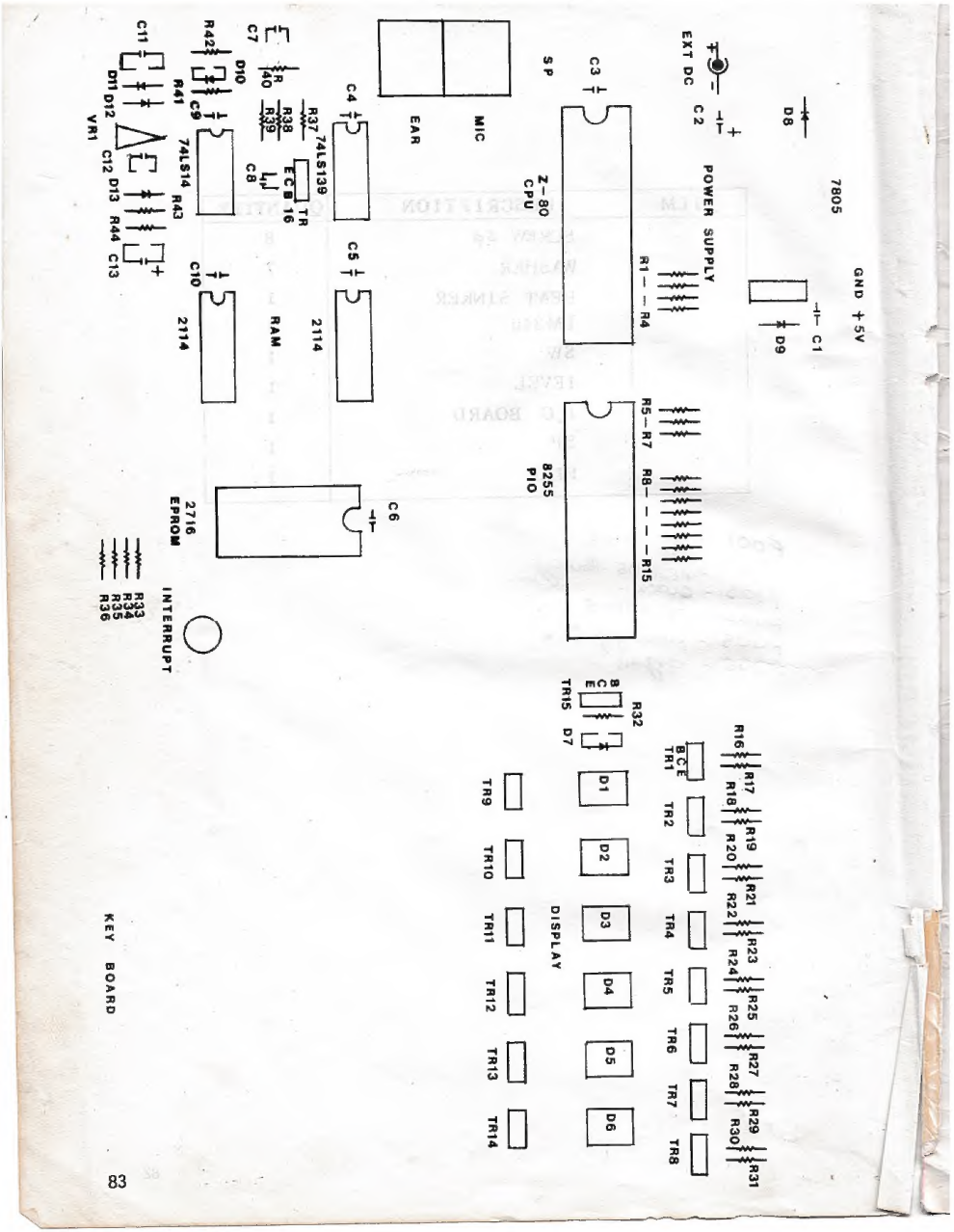

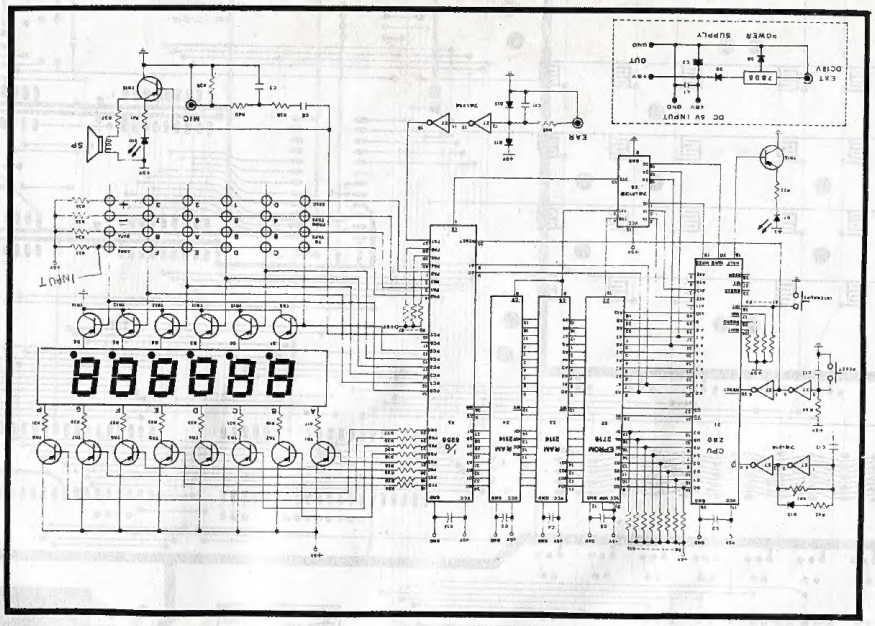

POWER SUPPLY
DC 5V INPUT
EXT DC 12V
7805
OUT
GND
+5V
MIC
EAR
SP
INPUT

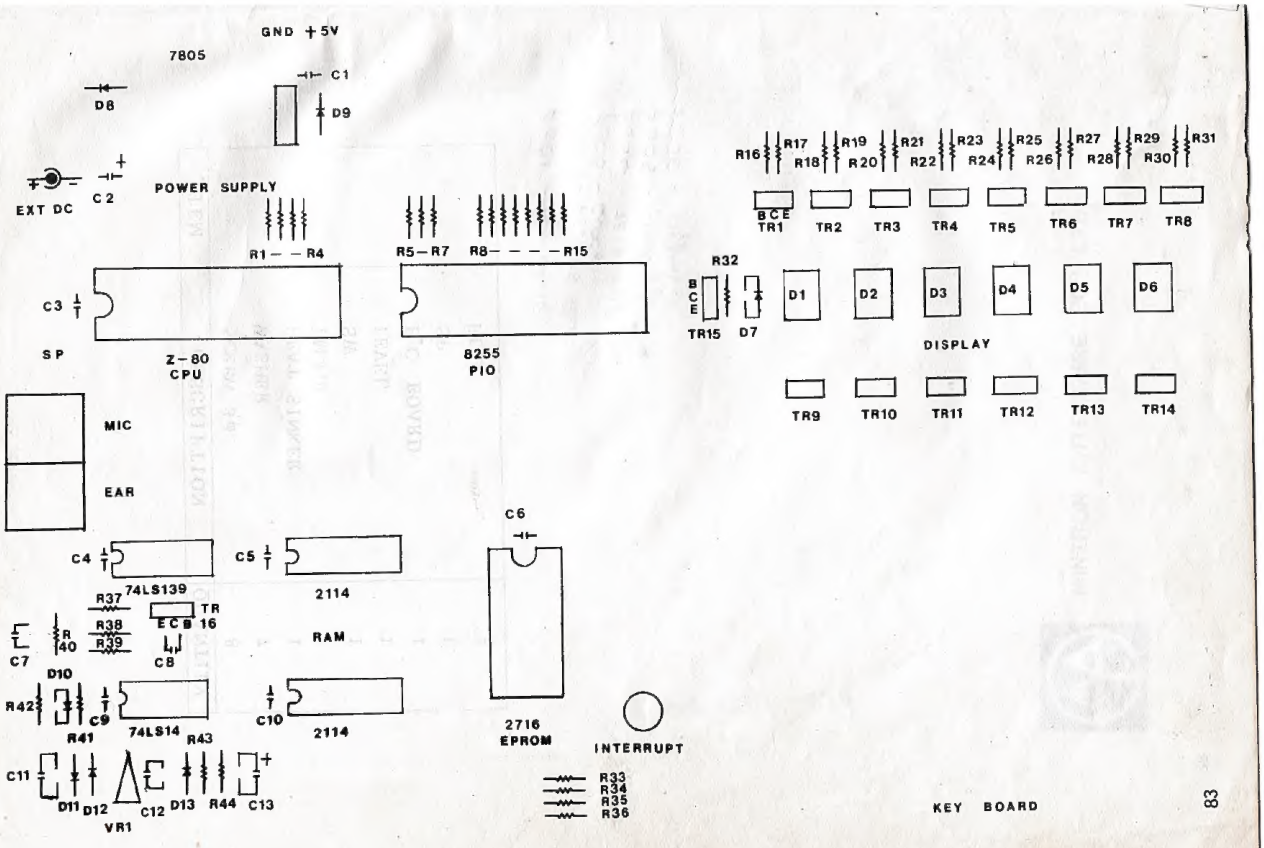

GND +5V
7805
C1
D8
D9
EXT DC
C2
POWER SUPPLY
R1 — — R4
R5 — R7
R8 — — — — R15
C3
SP
Z-80
CPU
8255
PIO
MIC
EAR
C4
74LS139
C5
2114
R37
R38
R39
TR
ECB 16
C7
R 40
C8
RAM
D10
R42
C9
R41
74LS14
R43
C10
2114
C11
D11
D12
VR1
C12
D13
R44
C13
C6
2716
EPROM
INTERRUPT
R33
R34
R35
R36
R16
R17
R18
R19
R20
R21
R22
R23
R24
R25
R26
R27
R28
R29
R30
R31
BCE
TR1
TR2
TR3
TR4
TR5
TR6
TR7
TR8
R32
BCE
TR15
D7
D1
D2
D3
D4
D5
D6
DISPLAY
TR9
TR10
TR11
TR12
TR13
TR14
KEY BOARD

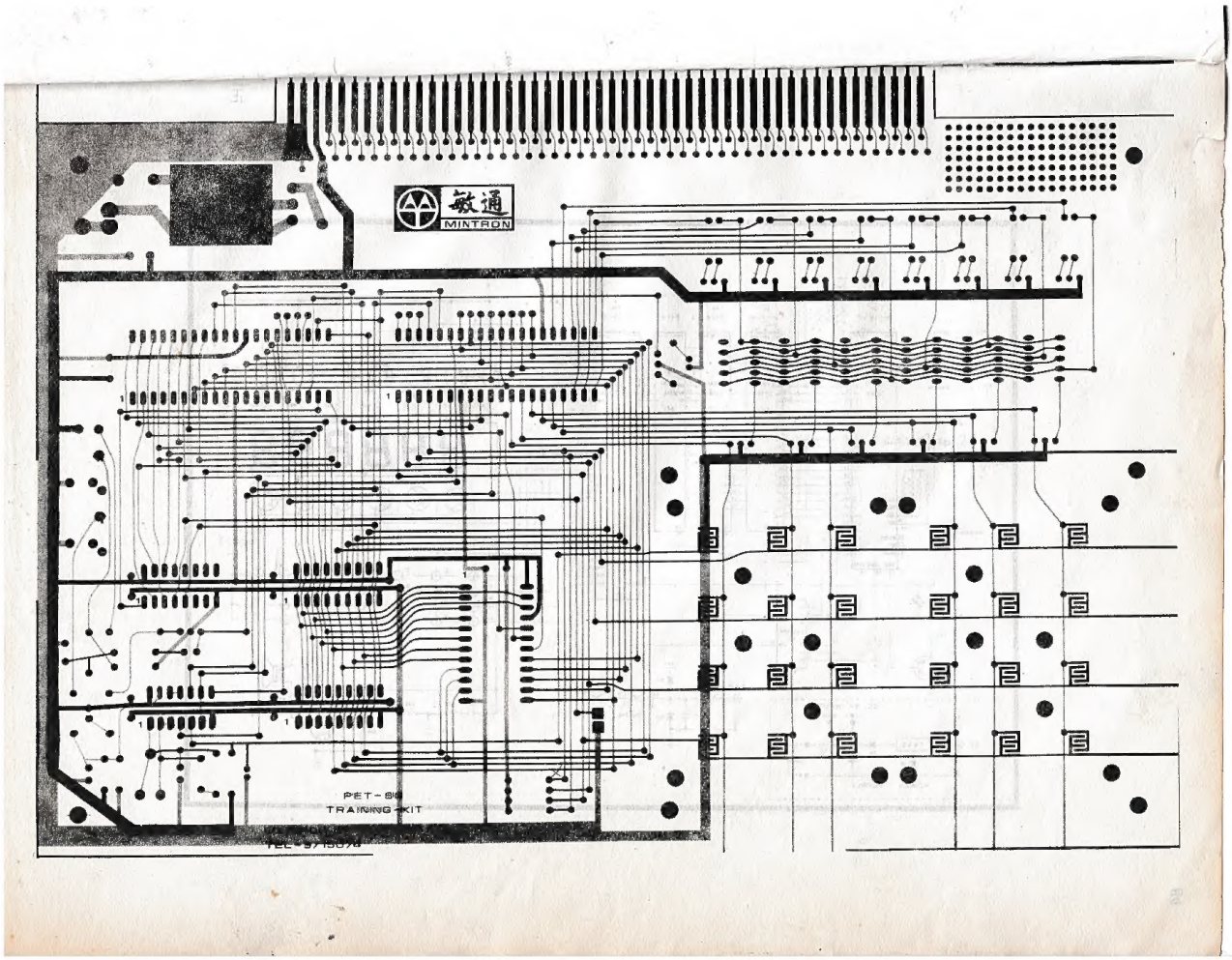
敏通
MINTRON
PET-8
TRAINING KIT

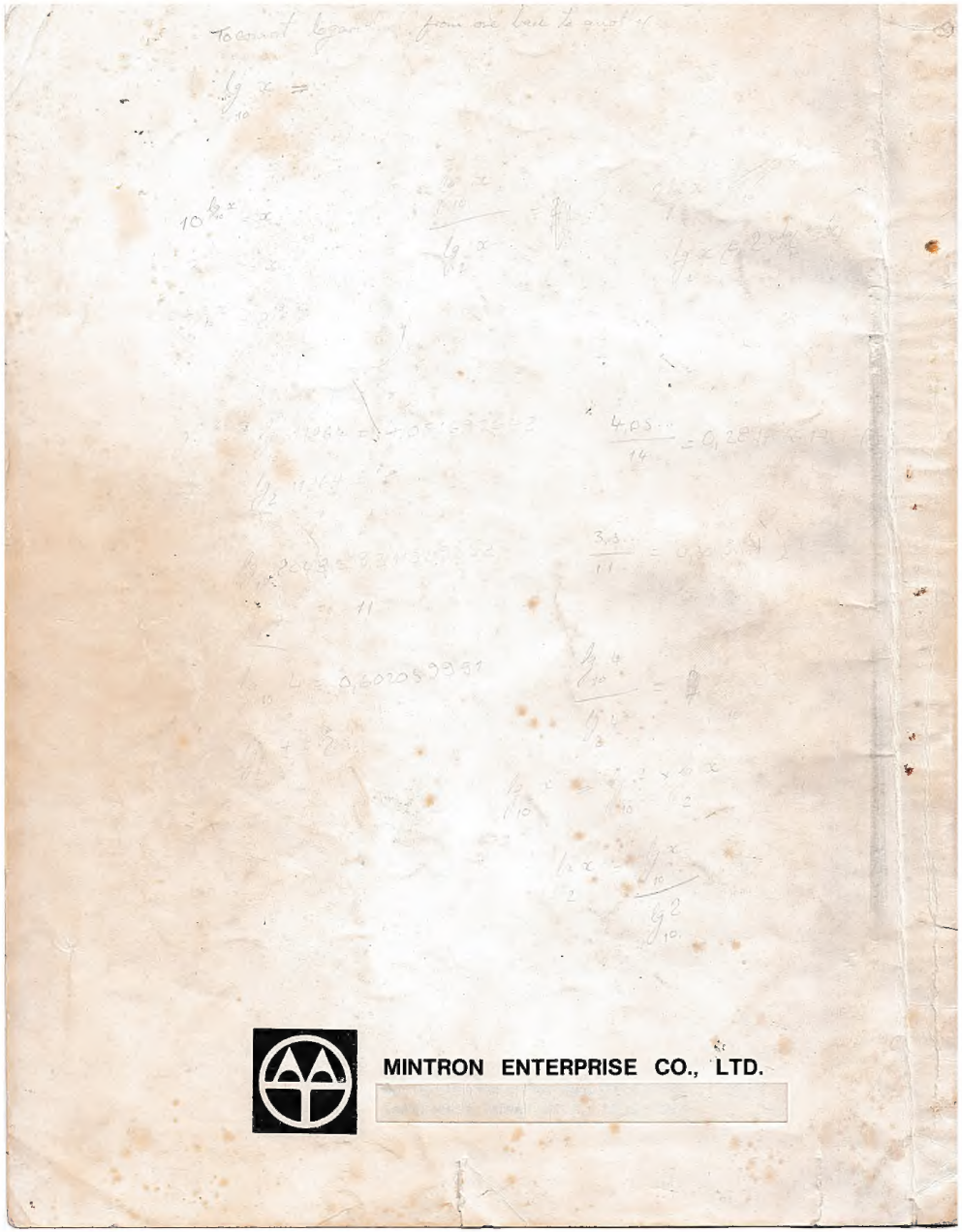

MINTRON ENTERPRISE CO., LTD.